PG - 6DI

-40°C +85°C

Specifications

- **Voltage range :** 50 VDC to 550 VDC
- **Can size :** 35ϕ x 62mm to 90ϕ x 240mm
- **Operating Temperature range :** -40°C to + 85°C
- **Capacitance :** 330 MFD to 470000 MFD
  Tolerance ± 20%
- **Leakage current:** The max. leakage current (IL) is given by the formula:
  IL = 0.003 CV (microamps)
  C = capacitance in microfarads
  V = DC rated voltage
  Pre-conditioning of the capacitors prior to testing for leakage current is essential.
- **Ripple Current:** All capacitors withstand rms ripple current at 100 Hz at 85°C. When capacitors operate at temperatures other than 85°C, the permissible rms ripple current at 85°C should be multiplied by the factors given below :

+40°C	+45°C	+50°C	+65°C
2.2	2.1	1.9	1.6

Where capacitors are required to operate at frequencies other than 100 Hz, the multiplying factors given below, may be used to determine the ripple current capacity, at that frequency.

Frequency Hz	100	120	250	500	1k to10k	>10K
Multiplying Factor	1.0	1.02	1.05	1.20	1.32	1.35

- **Notes :**

1. Can is negative, However, it is isolated with a PVC insulating sleeve and polypropylene end-disc.
2. The base stud is also negative and can be insulated with a nylon nut. Please see the page regarding mounting accessories for details.
3. Maximum ripple current for each capacitor diameter .

Capacitor Diameter (mm)	35	50	63	76	90
Max. Ripple Current (Amps)	20	20	40	40	72

Application

Filter, energy storage, UPS, General Purpose Power Supplies.

Capacitor mounting

Capacitors are available in screw terminals in three mounting styles

AEST - Screw terminals with plain insulated base. *see page 9,10*

AEST-D - Screw terminals with stud mounting. *see page 9,10*

AEST-AL - Capacitor with aluminium bottom disc. *see page 11*

Capacitor Terminal Style

Capacitors are available in two different terminal style, round and across flat. Below table summarizes the available terminal styles in different capacitors diameter

Capacitors Diameter (mm)	35	50	63	76	90
Terminal Style - Round	●	●	●	●	●
Terminal Style - Across Flat		●	●	●	●

For details see pages 9, 10, 11

Marking on capacitors

Each capacitor will have the following information printed on it, sequentally:

- The Company's symbol followed by the words ALCON ELECTRONICS
- The capacitor grade viz. PG-6DI
- The capacitance value __ MFD, rated voltage __VDC
- The surge voltage
- Capacity tolerance
- Climatic category
- Part number on non-standard capacitors
- CE marking

Useful life

Useful life is a period of time which the capacitor takes to reach "end of life".

For PG-6DI capacitors the useful life is estimated as 12000 hours at maximum rated temperature, ripple current and voltages.

End of the defined as follows :

1. Catastrophic failure : capacitor short or open circuit
2. Mechanical failure : operation of safety vent or sleeve damage
3. Parametric failure :
   a. Capacitance change ±30%
   b. ESR exceed three times specified value
   c. Leakage current exceed specified value

The useful life for a known ripple current load and ambient temperature (Ta) °C is determined on the basis of the " Life graph" shown below.

Manufacturing Date Code Chart

The manufacturing code shall consists of four digits (alphanumeric). The first two shall denote the date (numeric). The third stands for the month (alpha-numeric). The fourth stands for the year (alphabet)

First two spaces DATE	Third space MONTH	Fourth space YEAR
01	1 = JANUARY	A = 2012
02	2 = FEBRUARY	B = 2013
03	3 = MARCH	C = 2014
.	4 = APRIL	D = 2015
.	5 = MAY	E = 2016
.	6 = JUNE	F = 2017
10	7 = JULY	G = 2018
11	8 = AUGUST	H = 2019
.	9 = SEPTEMBER	J = 2020
.	X = OCTOBER	K = 2021
.	Y = NOVEMBER	L = 2022
31	Z = DECEMBER	M = 2023

For example :

1. Manufacturing code 023A will mean 2nd March, 2012
2. Manufacturing code 10XA will mean 10th October, 2012

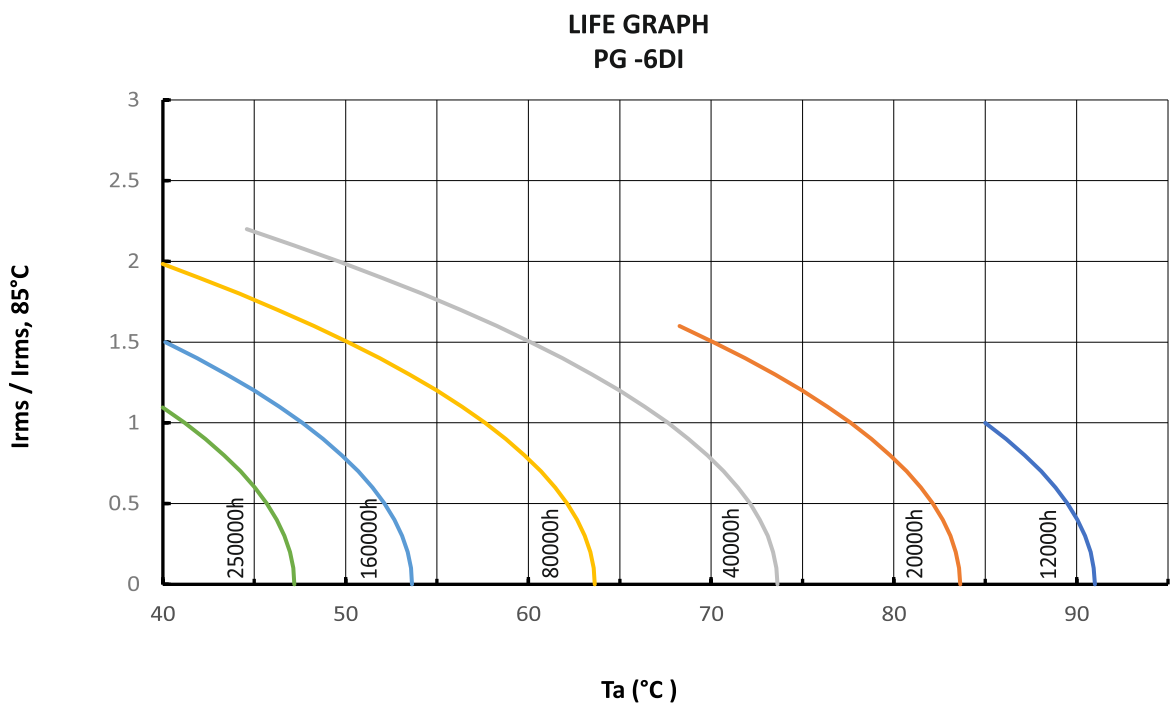

PG - 6DI

-40°C +85°C

Standard Capacitor Values

Rated Voltage (VDC)	Surge Voltage (VDC)	Capacitance Nominal (MFD)	MAX ESR at 100 Hz, 25°C (miliohm)	Ripple Current (Irms) at 100 Hz, 85°C (Amps)	Can size Nominal D x L mm	Case code	Ordering code
50	60	4700	70.8	4.29	35x62	025	SA047000050AA025_ _ _ _M01
		5600	61.6	4.60	35x62	025	SA056000050AA025_ _ _ _M01
		6800	59.6	4.68	35x62	025	SA068000050AA025_ _ _ _M01
		10000	44.6	6.05	35x80	012	SA100000050AA012_ _ _ _M01
		10000	46.1	7.26	50x80	020	SA100000050AA020_ _ _ _M01
		15000	22.2	9.70	35x105	013	SA150000050AA013_ _ _ _M01
		22000	17.9	11.66	50x80	020	SA220000050AA020_ _ _ _M01
		27000	14.1	13.11	50x80	020	SA270000050AA020_ _ _ _M01
		33000	11.7	16.24	50x105	022	SA330000050AA022_ _ _ _ M01
		47000	10.3	19.67	63x105	026	SA470000050AA026_ _ _ _M01
		68000	10.8	21.45	76x105	028	SA680000050AA028_ _ _ _M01
		82000	10.9	22.55	76x120	041	SA820000050AA041_ _ _ _M01
		100000	9.7	23.96	76x120	041	SA1000H0050AA041_ _ _ _M01
		150000	8.9	27.12	76x146	081	SA1500H0050AA081_ _ _ _M01
		180000	8.0	27.50	90x105	093	SA1800H0050AA093_ _ _ _M01
		220000	6.6	32.00	90X120	097	SA2200H0050AA097_ _ _ _M01
		270000	6.5	35.00	90X146	095	SA2700H0050AA095_ _ _ _M01
		330000	5.7	42.50	76x240	091	SA3300H0050AA091_ _ _ _M01
		390000	4.9	48.50	90x220	094	SA3900H0050AA094_ _ _ _M01
		470000	4.1	55.00	90x240	098	SA4700H0050AA098_ _ _ _M01
63	75	4700	55.6	4.84	35x62	025	SA047000063AA025_ _ _ _M01
		5600	43.1	5.50	35x62	025	SA056000063AA025_ _ _ _M01
		6800	37.5	6.60	35x80	012	SA068000063AA012_ _ _ _M01
		10000	27.5	7.70	35x80	012	SA100000063AA012_ _ _ _M01
		10000	24.6	9.94	50x80	020	SA100000063AA020_ _ _ _M01
		15000	21.6	10.60	50x80	020	SA150000063AA020_ _ _ _M01
		22000	17.6	13.26	50x105	022	SA220000063AA022_ _ _ _M01
		27000	15.1	14.30	50x105	022	SA270000063AA022_ _ _ _M01
		33000	14.7	16.50	63x105	026	SA330000063AA026_ _ _ _M01
		47000	12.6	19.81	76x105	028	SA470000063AA028_ _ _ _M01
		68000	11.2	22.31	76x120	041	SA680000063AA041_ _ _ _M01
		82000	10.4	23.10	76x120	041	SA820000063AA041_ _ _ _M01
		82000	10.4	24.10	90X105	093	SA820000063AA093_ _ _ _M01
		100000	9.6	26.05	76x146	081	SA1000H0063AA081_ _ _ _M01
		150000	8.2	28.60	90X120	097	SA1500H0063AA097_ _ _ _M01
		180000	7.8	35.00	76x220	092	SA1800H0063AA092_ _ _ _M01
		180000	7.7	32.00	90X146	095	SA1800H0063AA095_ _ _ _M01
		220000	7.0	38.50	76x240	091	SA2200H0063AA091_ _ _ _M01
		270000	6.7	41.50	90x220	094	SA2700H0063AA094_ _ _ _M01
		330000	6.3	44.50	90x240	098	SA3300H0063AA098_ _ _ _M01

Custom designed capacitors available

PG - 6DI

-40°C +85°C

Standard Capacitor Values

Rated Voltage (VDC)	Surge Voltage (VDC)	Capacitance Nominal (MFD)	MAX ESR at 100 Hz, 25°C (miliohm)	Ripple Current (Irms) at 100 Hz, 85°C (Amps)	Can size Nominal D x L mm	Case code	Ordering code
75	90	4700	40.7	6.34	35x80	012	SA047000075AA012_ _ _ _M01
		5600	33.3	7.00	35x80	012	SA056000075AA012_ _ _ _M01
		6800	25.4	9.09	35x105	013	SA068000075AA013_ _ _ _M01
		10000	20.9	10.79	50x80	020	SA100000075AA020_ _ _ _M01
		10000	20.7	12.20	50x105	022	SA100000075AA022_ _ _ _M01
		15000	17.6	13.26	50x105	022	SA150000075AA022_ _ _ _M01
		22000	14.8	16.46	63x105	026	SA220000075AA026_ _ _ _M01
		27000	13.8	17.05	63x105	026	SA270000075AA026_ _ _ _M01
		33000	12.6	19.80	76x105	028	SA330000075AA028_ _ _ _M01
		47000	11.9	21.60	76x120	041	SA470000075AA041_ _ _ _M01
		68000	10.5	25.00	76x146	081	SA680000075AA081_ _ _ _M01
		68000	10.5	24.00	90X105	093	SA680000075AA093_ _ _ _M01
		82000	9.2	27.00	90X120	097	SA820000075AA097_ _ _ _M01
		100000	8.8	33.00	76x220	092	SA1000H0075AA092_ _ _ _M01
		120000	8.5	30.50	90X146	095	SA1200H0075AA095_ _ _ _M01
		150000	8.2	35.60	76x240	091	SA1500H0075AA091_ _ _ _M01
		180000	7.3	39.50	90x220	094	SA1800H0075AA094_ _ _ _M01
		220000	6.2	44.60	90x240	098	SA2200H0075AA098_ _ _ _M01
100	115	2200	87.9	3.85	35x62	025	SA022000100AA025_ _ _ _M01
		2700	77.2	4.60	35x80	012	SA027000100AA012_ _ _ _M01
		3300	65.3	5.00	35x80	012	SA033000100AA012_ _ _ _M01
		4700	34.0	6.93	35x80	012	SA047000100AA012_ _ _ _M01
		5600	30.0	9.00	50x80	020	SA056000100AA020_ _ _ _M01
		6800	24.6	9.94	50x80	020	SA068000100AA020_ _ _ _M01
		10000	17.6	13.26	50x105	022	SA100000100AA022_ _ _ _M01
		15000	14.8	16.45	63x105	026	SA150000100AA026_ _ _ _M01
		22000	11.1	21.09	76x105	028	SA220000100AA028_ _ _ _M01
		27000	10.2	22.00	76x105	028	SA270000100AA028_ _ _ _M01
		33000	8.9	24.94	76x120	041	SA330000100AA041_ _ _ _M01
		33000	8.3	27.00	90X105	093	SA330000100AA093_ _ _ _M01
		47000	8.2	28.31	76x146	081	SA470000100AA081_ _ _ _M01
		47000	7.5	30.00	90X120	097	SA470000100AA097_ _ _ _M01
		56000	7.3	33.00	90X146	095	SA560000100AA095_ _ _ _M01
		68000	7.1	36.70	76x220	092	SA680000100AA092_ _ _ _M01
		82000	6.8	39.00	76x240	091	SA820000100AA091_ _ _ _M01
		100000	6.5	42.00	90x220	094	SA1000H0100AA094_ _ _ _M01
		120000	5.4	48.00	90x240	098	SA1200H0100AA098_ _ _ _M01

Custom designed capacitors available

PG - 6DI

-40°C +85°C

Standard Capacitor Values

Rated Voltage (VDC)	Surge Voltage (VDC)	Capacitance Nominal (MFD)	MAX ESR at 100 Hz, 25°C (miliohm)	Ripple Current (Irms) at 100 Hz, 85°C (Amps)	Can size Nominal D x L mm	Case code	Ordering code
150	172	1000	205.7	3.19	35x105	013	SA010000150AA013_ _ _ _M01
		2000	66.5	6.05	50x80	020	SA020000150AA020_ _ _ _M01
		2200	63.4	6.19	50x80	020	SA022000150AA020_ _ _ _M01
		2500	59.3	7.22	50x105	022	SA025000150AA022_ _ _ _M01
		3300	49.5	8.99	63x105	026	SA033000150AA026_ _ _ _M01
		4700	36.5	9.2	50x105	022	SA047000150AA022 _ _ _ _M01
		4700	36.2	10.52	63x105	026	SA047000150AA026 _ _ _ _M01
		5600	33.1	11.00	63x105	026	SA056000150AA026 _ _ _ _M01
		6800	27.3	12.10	63x105	026	SA068000150AA026_ _ _ _M01
		10000	19.6	14.3	63x105	026	SA100000150AA026_ _ _ _M01
		10000	19.6	16.50	63x146	035	SA100000150AA035_ _ _ _M01
		12000	15.8	20.34	76x146	081	SA120000150AA081_ _ _ _M01
		15000	14.1	19.4	63x145	035	SA150000150AA035_ _ _ _M01
		15000	14.1	21.54	76x146	081	SA150000150AA081_ _ _ _M01
		22000	13.6	26.50	76x220	092	SA220000150AA092_ _ _ _M01
		22000	13.6	21.10	90X105	093	SA220000150AA093_ _ _ _M01
		27000	11.9	28.40	76x220	092	SA270000150AA092_ _ _ _M01
		27000	11.9	23.80	90X120	097	SA270000150AA097_ _ _ _M01
		33000	9.4	32.00	76x220	092	SA330000150AA092_ _ _ _M01
		33000	9.4	29.00	90X146	095	SA330000150AA095_ _ _ _M01
		39000	8.7	34.50	76x240	091	SA390000150AA091_ _ _ _M01
		47000	7.7	38.50	90x220	094	SA470000150AA094_ _ _ _M01
		56000	7.3	41.20	90x240	098	SA270000150AA098_ _ _ _M01
200	230	1000	150.0	3.30	35x80	012	SA010000200AA012_ _ _ _M01
		1500	141.2	3.85	35x105	013	SA015000200AA013_ _ _ _M01
		2200	85.8	6.00	50x105	022	SA022000200AA022_ _ _ _ M01
		3300	62.5	8.00	63x105	026	SA033000200AA026_ _ _ _M01
		4700	45.9	8.2	50x105	022	SA047000200AA022_ _ _ _M01
		4700	45.0	10.00	63x120	039	SA047000200AA039_ _ _ _M01
		5600	28.1	12.65	63x120	039	SA056000200AA039_ _ _ _M01
		6800	23.7	13.0	63x105	026	SA068000200AA026_ _ _ _M01
		6800	23.1	15.51	76x120	041	SA068000200AA041_ _ _ _M01
		8200	21.6	16.04	76x120	041	SA082000200AA041_ _ _ _M01
		10000	18.4	16.4	76x105	028	SA100000200AA028_ _ _ _M01
		10000	18.1	19.00	76x146	081	SA100000200AA081_ _ _ _M01
		10000	18.1	18.25	90X105	093	SA100000200AA093_ _ _ _M01
		12000	16.4	20.00	76x146	081	SA120000200AA081_ _ _ _M01
		15000	14.7	25.51	76x220	092	SA150000200AA092_ _ _ _M01
		15000	14.7	21.40	90X120	097	SA150000200AA097_ _ _ _M01
		22000	11.8	28.50	76x220	092	SA220000200AA092_ _ _ _M01
		22000	11.8	25.90	90X146	095	SA220000200AA095_ _ _ _M01
		27000	10.3	31.70	76x240	091	SA270000200AA091_ _ _ _M01
		33000	9.6	34.50	90x220	094	SA330000200AA094_ _ _ _M01
		39000	8.4	38.50	90x240	098	SA390000200AA098_ _ _ _M01

Custom designed capacitors available

PG - 6DI

-40°C +85°C

Standard Capacitor Values

Rated Voltage (VDC)	Surge Voltage (VDC)	Capacitance Nominal (MFD)	MAX ESR at 100 Hz, 25°C (miliohm)	Ripple Current (Irms) at 100 Hz, 85°C (Amps)	Can size Nominal D x L mm	Case code	Ordering code
250	288	470	280.2	2.16	35x62	025	SA004700250AA025_ _ _ _M01
		680	184.7	3.37	35x105	013	SA006800250AA013_ _ _ _M01
		1000	119.6	4.51	50x80	020	SA010000250AA020_ _ _ _M01
		2000	62.3	7.04	50x105	022	SA020000250AA022_ _ _ _M01
		2200	55.7	7.45	50x105	022	SA022000250AA022_ _ _ _M01
		2500	45.1	9.42	63x105	026	SA025000250AA026_ _ _ _M01
		3300	43.6	9.58	63x105	026	SA033000250AA026_ _ _ _M01
		4700	37.3	10.4	63x105	026	SA047000250AA026_ _ _ _M01
		4700	37.2	11.00	63x120	039	SA047000250AA039_ _ _ _M01
		5600	28.1	12.65	63x120	039	SA056000250AA039_ _ _ _M01
		6800	17.8	16.7	76x105	028	SA068000250AA028_ _ _ _M01
		6800	17.8	19.16	76x146	081	SA068000250AA081_ _ _ _M01
		8200	16.7	19.80	76x146	081	SA082000250AA081_ _ _ _M01
		8200	15.1	20.00	90X105	093	SA082000250AA093_ _ _ _M01
		10000	14.2	18.7	76x105	028	SA100000250AA028_ _ _ _M01
		10000	14.1	21.54	76x146	081	SA100000250AA081_ _ _ _M01
		10000	14.1	21.85	90X120	097	SA100000250AA097_ _ _ _M01
		12000	13.5	22.00	76x146	081	SA120000250AA081_ _ _ _M01
		15000	12.9	27.20	76x220	092	SA150000250AA092_ _ _ _M01
		18000	10.8	31.00	76x240	091	SA180000250AA091_ _ _ _M01
		18000	10.9	27.00	90X146	095	SA180000250AA095_ _ _ _M01
		22000	10.0	33.80	90x220	094	SA220000250AA094_ _ _ _M01
		27000	7.7	38.50	90x220	094	SA270000250AA094_ _ _ _M01
315	362	2200	55.8	8.5	63x105	026	SA022000315AA026_ _ _ _M01
		3300	59.3	9.7	76x120	041	SA033000315AA041_ _ _ _M01
		4700	37.9	12.1	76x120	041	SA047000315AA041_ _ _ _M01
		5600	36.9	13.3	76x146	081	SA056000315AA081_ _ _ _M01
		6800	22.8	16.9	76x146	081	SA068000315AA081_ _ _ _M01
		6800	22.7	16.3	90X105	093	SA068000315AA093_ _ _ _M01
		8200	22.8	20.5	76x220	092	SA082000315AA092_ _ _ _M01
		8200	22.8	17.2	90X120	097	SA082000315AA097_ _ _ _M01
		10000	16.3	24.2	76x220	092	SA100000315AA092_ _ _ _M01
		12000	13.3	26.8	76x220	092	SA120000315AA092_ _ _ _M01
		12000	13.3	24.4	90X146	095	SA120000315AA095_ _ _ _M01
		15000	12.2	29.1	76x240	091	SA150000315AA091_ _ _ _M01
		15000	12.2	30.7	90x220	094	SA150000315AA094_ _ _ _M01

Custom designed capacitors available

PG - 6DI

-40°C +85°C

Standard Capacitor Values

Rated Voltage (VDC)	Surge Voltage (VDC)	Capacitance Nominal (MFD)	MAX ESR at 100 Hz, 25°C (miliohm)	Ripple Current (Irms) at 100 Hz, 85°C (Amps)	Can size Nominal D x L mm	Case code	Ordering code
350	385	330	386.0	2.06	35x80	012	SA003300350AA012_ _ _ _M01
		1000	116.5	5.15	50x105	022	SA010000350AA022_ _ _ _M01
		1500	94.6	6.50	63x105	026	SA015000350AA026_ _ _ _M01
		2200	51.4	7.8	50x105	022	SA022000350AA022_ _ _ _M01
		2200	51.2	9.37	63x120	039	SA022000350AA039_ _ _ _M01
		3300	37.7	10.3	63x105	026	SA033000350AA026_ _ _ _M01
		3300	37.9	10.89	63x120	039	SA033000350AA039_ _ _ _M01
		3300	42.4	11.44	76x120	041	SA033000350AA041_ _ _ _M01
		4700	33.6	12.2	76x105	028	SA047000350AA028_ _ _ _M01
		4700	33.6	13.95	76x146	081	SA047000350AA081_ _ _ _M01
		5600	25.7	15.95	76x146	081	SA056000350AA081_ _ _ _M01
		6800	22.0	15.9	76x120	041	SA068000350AA041_ _ _ _M01
		6800	22.0	17.25	76x146	081	SA068000350AA081_ _ _ _M01
		8200	20.7	21.50	76x220	092	SA082000350AA092_ _ _ _M01
		8200	20.8	18.00	90X120	097	SA082000350AA097_ _ _ _M01
		10000	15.0	20.9	76x146	081	SA100000350AA081_ _ _ _M01
		10000	15.0	25.30	76x220	092	SA100000350AA092_ _ _ _M01
		12000	12.7	28.50	76x240	091	SA120000350AA091_ _ _ _M01
		12000	12.7	25.00	90X146	095	SA120000350AA095_ _ _ _M01
		15000	11.2	32.00	90x220	094	SA150000350AA094_ _ _ _M01
400	440	680	203.8	3.46	50x80	020	SA006800400AA020_ _ _ _M01
		1000	107.6	5.36	50x105	022	SA010000400AA022_ _ _ _ M01
		1000	107.5	6.10	63x105	026	SA010000400AA026_ _ _ _M01
		1500	100.3	6.32	63x105	026	SA015000400AA026_ _ _ _M01
		2200	62.5	8.49	63x120	039	SA022000400AA039_ _ _ _M01
		3300	51.5	10.39	76x120	041	SA033000400AA041_ _ _ _M01
		4700	40.3	12.74	76x146	081	SA047000400AA081_ _ _ _M01
		5600	36.6	13.37	76x146	081	SA056000400AA081_ _ _ _M01
		6800	38.2	15.84	76x220	092	SA068000400AA092_ _ _ _M01
		6800	38.2	12.58	90X105	093	SA068000400AA093_ _ _ _M01
		8200	31.9	17.33	76x220	092	SA082000400AA092_ _ _ _M01
		8200	31.8	14.55	90X120	097	SA082000400AA097_ _ _ _M01
		10000	26.5	17.30	90X146	095	SA100000350AA095_ _ _ _M01
		12000	22.4	22.60	90x220	094	SA120000350AA094_ _ _ _M01
		12000	22.4	21.50	76x240	091	SA120000350AA091_ _ _ _M01
		15000	20.2	23.85	90x220	094	SA150000400AA094_ _ _ _M01

Custom designed capacitors available

PG - 6DI

-40°C +85°C

Standard Capacitor Values

Rated Voltage (VDC)	Surge Voltage (VDC)	Capacitance Nominal (MFD)	MAX ESR at 100 Hz, 25°C (miliohm)	Ripple Current (Irms) at 100 Hz, 85°C (Amps)	Can size Nominal D x L mm	Case code	Ordering code
450	495	470	279.9	2.95	50x80	020	SA004700450AA020_ _ _ _M01
		680	121.9	5.03	50x105	022	SA006800450AA022_ _ _ _M01
		1000	107.6	6.10	63x105	026	SA010000450AA026_ _ _ _M01
		1500	96.6	6.82	63x120	039	SA015000450AA039 _ _ _ _M01
		2200	72.8	7.4	63x105	026	SA022000450AA026_ _ _ _M01
		2200	72.7	7.87	63x120	039	SA022000450AA039_ _ _ _M01
		3300	52.2	9.8	76x105	028	SA033000450AA028_ _ _ _M01
		3300	52.1	11.20	76x146	081	SA033000450AA081_ _ _ _M01
		4700	33.8	13.92	76x146	081	SA047000450AA081_ _ _ _M01
		4700	33.8	13.36	90X105	093	SA047000450AA093_ _ _ _M01
		5600	28.6	15.35	90X120	097	SA056000450AA097_ _ _ _M01
		6800	25.1	16.50	90X146	095	SA068000450AA095_ _ _ _M01
		8200	20.2	21.78	76x220	092	SA082000450AA092_ _ _ _M01
		8200	20.2	19.80	90X146	095	SA082000450AA095_ _ _ _M01
		10000	18.5	23.65	76x240	091	SA100000450AA091_ _ _ _M01
		12000	17.2	25.85	90x220	094	SA120000450AA094_ _ _ _M01
		15000	15.1	27.00	90X240	098	SA150000450AA098_ _ _ _M01
500	550	820	154.0	4.95	50x105	022	SA008200500AA022_ _ _ _M01
		1000	138.2	5.23	50x105	022	SA010000500AA022_ _ _ _M01
		1500	99.3	7.02	63x105	026	SA015000500AA026_ _ _ _M01
		2200	67.9	9.0	63x120	039	SA022000500AA039_ _ _ _M01
		2200	68.0	9.44	76x105	028	SA022000500AA028_ _ _ _M01
		3300	54.8	10.9	63x146	035	SA033000500AA035_ _ _ _M01
		3300	54.6	12.10	76x146	081	SA033000500AA081_ _ _ _M01
		4700	41.4	13.9	76x146	081	SA047000500AA081_ _ _ _M01
		4700	41.7	13.30	90X105	093	SA047000500AA093_ _ _ _M01
		5600	39.7	14.40	90X120	097	SA056000500AA097_ _ _ _M01
		6800	33.5	17.00	90X146	095	SA068000500AA095_ _ _ _M01
		8200	27.1	21.60	76x240	091	SA082000500AA091_ _ _ _M01
		8200	27.1	22.75	90x220	094	SA082000500AA094_ _ _ _M01
		10000	21.7	22.9	90x175	096	SA100000500AA096_ _ _ _M01
		10000	21.7	25.40	90x220	094	SA100000500AA094_ _ _ _M01

Custom designed capacitors available

PG - 6DI

-40°C +85°C

Standard Capacitor Values

Rated Voltage (VDC)	Surge Voltage (VDC)	Capacitance Nominal (MFD)	MAX ESR at 100 Hz, 25°C (miliohm)	Ripple Current (Irms) at 100 Hz, 85°C (Amps)	Can size Nominal D x L mm	Case code	Ordering code
550	600	560	223.4	3.30	50x80	020	SA005600550AA020_ _ _ _M01
		680	213.8	3.80	50x105	022	SA006800550AA022_ _ _ _M01
		820	167.0	4.30	50x105	022	SA008200550AA022_ _ _ _M01
		1000	152.5	4.50	50x105	022	SA010000550AA022_ _ _ _M01
		1000	152.6	5.12	63x105	026	SA010000550AA026_ _ _ _M01
		1200	132.2	5.50	63x105	026	SA012000550AA026_ _ _ _M01
		1500	113.4	6.30	63x120	026	SA015000550AA026_ _ _ _M01
		1800	110.6	6.94	63x146	035	SA018000550AA035_ _ _ _M01
		1800	110.5	6.70	76x105	028	SA018000550AA028_ _ _ _M01
		2200	83.6	7.98	63x146	035	SA022000550AA035_ _ _ _M01
		2200	83.6	8.15	76x120	041	SA022000550AA041_ _ _ _M01
		2200	83.6	8.50	90X105	093	SA022000550AA093_ _ _ _M01
		2700	80.8	9.00	76x146	081	SA027000550AA081_ _ _ _M01
		3300	59.4	10.50	76x146	081	SA033000550AA081_ _ _ _M01
		4700	52.5	13.50	76x220	092	SA047000550AA092_ _ _ _M01
		5600	50.6	14.30	76x240	091	SA056000550AA091_ _ _ _M01
		5600	50.7	12.50	90X146	095	SA056000550AA095_ _ _ _M01
		8200	44.8	16.00	90x220	094	SA082000550AA094_ _ _ _M01
		10000	38.3	18.00	90x240	098	SA100000550AA098_ _ _ _M01

Custom designed capacitors available

PG - 6DI

-40°C +85°C

Terminal Style And Dimension With Round Insert

Screw Terminal Type AEST/AEST-D

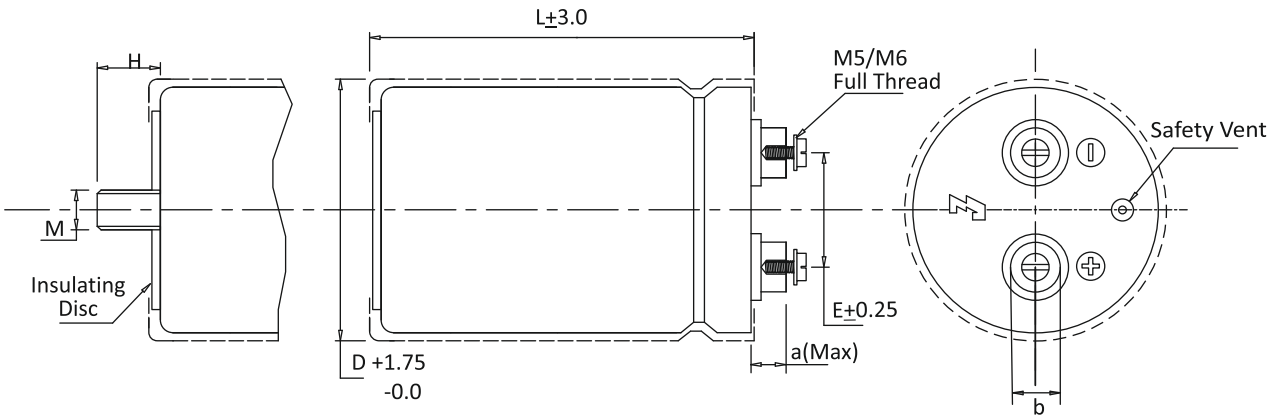

AEST -Screw terminals with plain insulated base.

AEST-D - Screw terminals with stud mounting.

Dimension in mm.

Terminal	D	E	L	a (Max)	b±0.1	M	H±1.0
M5	35	12.6	62	7.8	9.5	—	—
M5	35	12.6	80	7.8	9.5	—	—
M5	35	12.6	105	7.8	9.5	---	---
M5	50	22.1	80	7.8	9.5	M 12	17.0
M5	50	22.1	105	7.8	9.5	M 12	17.0
M5	50	22.1	120	7.8	9.5	M 12	17.0
M5	63	28.5	105	7.8	12.0	M 12	17.0
M5	63	28.5	120	7.8	12.0	M 12	17.0
M5	63	28.5	146	7.8	12.0	M 12	17.0
M5	76	31.6	105	7.8	12.0	M 12	17.0
M5	76	31.6	120	7.8	12.0	M 12	17.0
M5	76	31.6	146	7.8	12.0	M 12	17.0
M5	76	31.6	175	7.8	12.0	M 12	17.0
M5	76	31.6	220	7.8	12.0	M 12	17.0
M5	76	31.6	240	7.8	12.0	M 12	17.0
M6	76	31.6	105	5.3*	16.0	M 12	17.0
M6	76	31.6	120	5.3*	16.0	M 12	17.0
M6	76	31.6	146	5.3*	16.0	M 12	17.0
M6	76	31.6	175	5.3*	16.0	M 12	17.0
M6	76	31.6	220	5.3*	16.0	M 12	17.0
M6	76	31.6	240	5.3*	16.0	M 12	17.0
M6	90	32	105	5.3*	16.0	M 12	17.0
M6	90	32	146	5.3*	16.0	M 12	17.0
M6	90	32	175	5.3*	16.0	M 12	17.0
M6	90	32	220	5.3*	16.0	M 12	17.0
M6	90	32	240	5.3*	16.0	M 12	17.0

* Low Post Design

PG - 6DI

-40°C +85°C

Terminal Style And Dimension With Across Flat Insert

Screw Terminal Type AEST/AEST-D

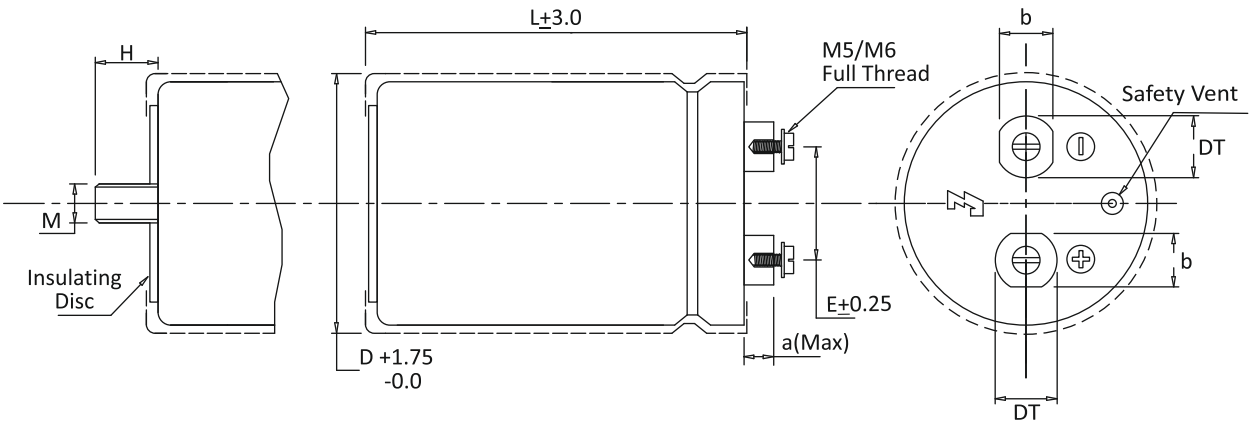

AEST -Screw terminals with plain insulated base.

AEST-D - Screw terminals with stud mounting.

Dimension in mm.

Terminal	D	E	L	a (Max)	b	DT	M	H±1.0
M5	50	22.1	80	5.5	10	13	12	17
M5	50	22.1	105	5.5	10	13	12	17
M5	50	22.1	120	5.5	10	13	12	17
M6	63	28.5	105	6.5	13	15	12	17
M6	63	28.5	120	6.5	13	15	12	17
M6	63	28.5	146	6.5	13	15	12	17
M6	76	31.6	105	6.5	13	15	12	17
M6	76	31.6	120	6.5	13	15	12	17
M6	76	31.6	146	6.5	13	15	12	17
M6	76	31.6	175	6.5	13	15	12	17
M6	76	31.6	220	6.5	13	15	12	17
M6	76	31.6	240	6.5	13	15	12	17
M6	90	32	105	6.5	13	15	12	17
M6	90	32	120	6.5	13	15	12	17
M6	90	32	146	6.5	13	15	12	17
M6	90	32	175	6.5	13	15	12	17
M6	90	32	220	6.5	13	15	12	17
M6	90	32	240	6.5	13	15	12	17
M6	100	32	105	6.5	13	15	12	17
M6	100	32	120	6.5	13	15	12	17
M6	100	32	146	6.5	13	15	12	17
M6	100	32	175	6.5	13	15	12	17
M6	100	32	220	6.5	13	15	12	17
M6	100	32	240	6.5	13	15	12	17
M6	120	41.50	105	6.5	13	15	12	17
M6	120	41.50	120	6.5	13	15	12	17
M6	120	41.50	146	6.5	13	15	12	17
M6	120	41.50	175	6.5	13	15	12	17
M6	120	41.50	220	6.5	13	15	12	17
M6	120	41.50	240	6.5	13	15	12	17

PG - 6DI

-40°C +85°C

Terminal Style And Dimension

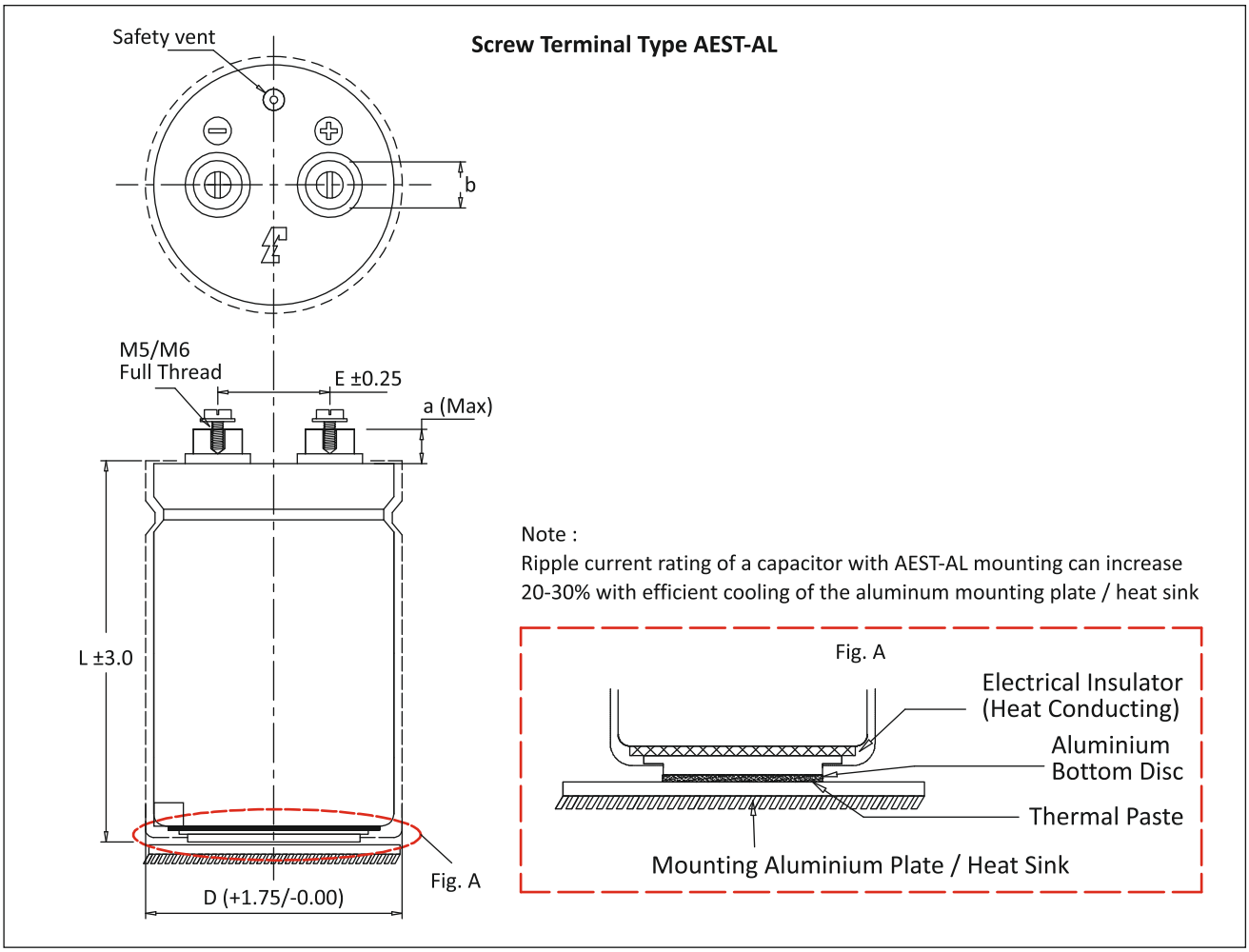

Dimension in mm.

Terminal	D	E	L	a (Max)	b±0.1
M5	63	28.5	105	7.8	12
M5	63	28.5	120	7.8	12
M5	63	28.5	146	7.8	12
M5	76	31.6	105	7.8	12
M5	76	31.6	120	7.8	12
M5	76	31.6	146	7.8	12
M5	76	31.6	175	7.8	12
M5	76	31.6	220	7.8	12
M5	76	31.6	240	7.8	12
M6	76	31.6	105	5.3 *	16
M6	76	31.6	120	5.3 *	16
M6	76	31.6	146	5.3 *	16
M6	76	31.6	175	5.3 *	16
M6	76	31.6	220	5.3 *	16
M6	76	31.6	240	5.3 *	16
M6	90	32	105	5.3 *	16
M6	90	32	146	5.3 *	16
M6	90	32	175	5.3 *	16
M6	90	32	220	5.3 *	16
M6	90	32	240	5.3 *	16

* Low Post Design

PG - 6DI

-40°C +85°C

Mounting Accessories

- **Insulating Nylon Nut and Washers for Cans with Bottom Stud**

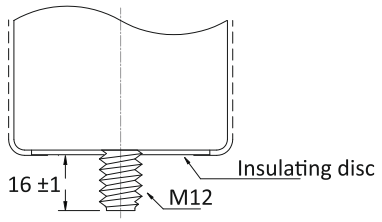

Type : AL-01

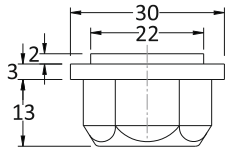

Type : AL-02

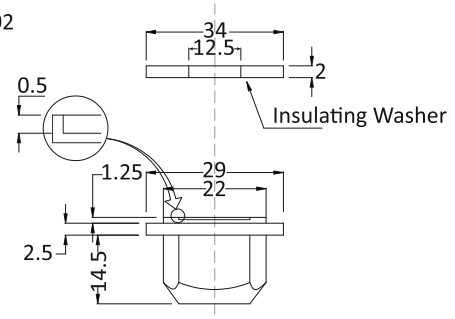

Type : AL-03

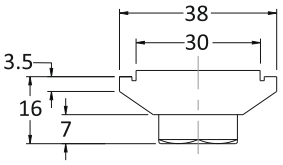

Type : AL-04

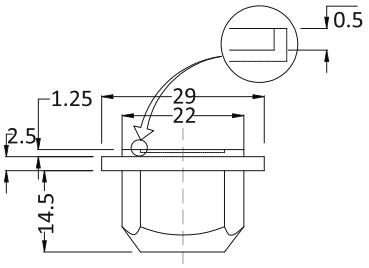

Type : AL-05

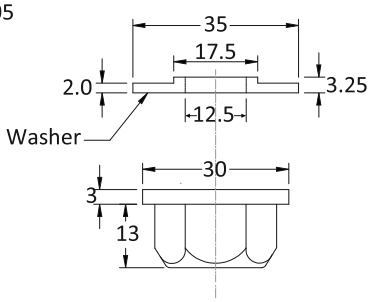

- **Vertical Mounting Clamps**

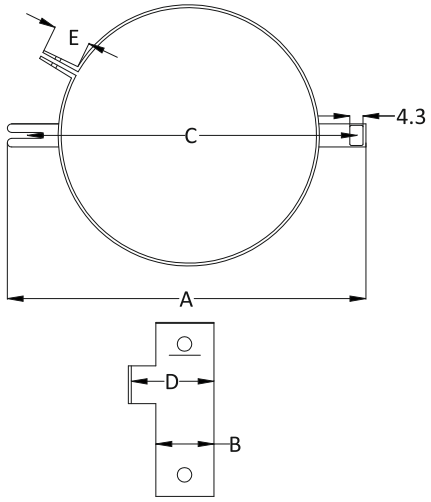

CAN	A	B	C	D	E
35	63	15	54	20	10

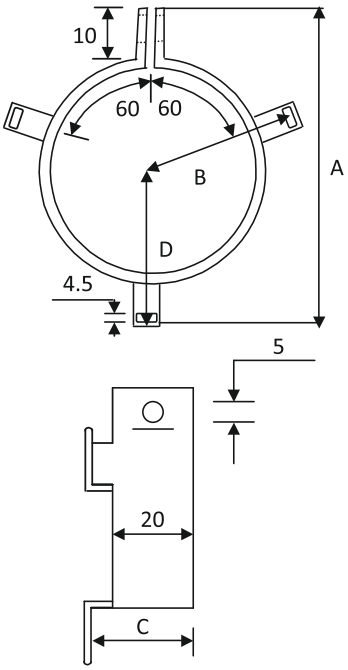

CAN DIA	A	B	C	D
50	76	33	30	40
63	89	39.5	30	46.5
76	102	46	30	53
90	116	53	30	60

Dimension in mm.

Catalogue No. AEPL PG-6DI-JULY-2020 (Rev 02)

The specification shown herein (page 1 to 13) pertain to the current manufacturing range of the Company. The Company reserves the right to change and /or modify any part of or whole of the specifications as a result of research and development and as may be necessary, without prior notice.

PG - 8K

-40°C +105°C

Specifications

- **Voltage range :** 50 VDC to 500 VDC
- **Can size :** 35ϕ x 62mm to 90ϕ x 220mm
- **Operating Temperature range :** -40°C to + 105°C
- **Capacitance :** 1000 MFD to 200000 MFD
  Tolerance ± 20%
- **Leakage current:** The max. leakage current (IL) is given by the formula:
  IL = 0.003 CV (microamps)
  C = capacitance in microfarads
  V = DC rated voltage
  Pre-conditioning of the capacitors prior to testing for leakage current is essential.
- **Ripple Current:** All capacitors withstand rms ripple current at 100 Hz at 105°C. When capacitors operate at temperatures other than 105°C,the permissible rms ripple current at 105°C should be multiplied by the factors given below :

+40°C	+45°C	+50°C	+65°C
2.7	2.6	2.5	2.2

Where capacitors are required to operate at frequencies other than 100 Hz, the multiplying factors given below, may be used to determine the ripple current capacity, at that frequency.

Frequency Hz	100	120	250	500	1k to10k	>10K
Multiplying Factor	1.0	1.02	1.05	1.20	1.32	1.35

- **Notes :**

1. Can is negative, However, it is isolated with a PVC insulating sleeve and polypropylene end-disc.
2. The base stud is also negative and can be insulated with a nylon nut. Please see the page regarding mounting accessories for details.
3. Maximum ripple current for each capacitor diameter .

Capacitor Diameter (mm)	35	50	63	76	90
Max. Ripple Current (Amps)	20	20	40	40	72

Application

High Temperature 105 °C for High Ripple Current Applications like, PWM Inverters, High KVA On-Line UPS, Frequency Converters, AC Drives, Renewable Energy Power Supplies, elevators drive

Capacitor mounting

Capacitors are available in screw terminals in three mounting styles

AEST - Screw terminals with plain insulated base. *see page 6,7*

AEST-D - Screw terminals with stud mounting. *see page 6,7*

AEST-AL - Capacitor with aluminium bottom disc. *see page 8*

Capacitor Terminal Style

Capacitors are available in two different terminal style, round and across flat. Below table summarizes the available terminal styles in different capacitors diameter

Capacitors Diameter (mm)	35	50	63	76	90
Terminal Style - Round	●	●	●	●	●
Terminal Style - Across Flat		●	●	●	●

For details see pages 6,7,8

Marking on capacitors

Each capacitor will have the following information printed on it, sequentally:

- The Company's symbol followed by the words ALCON ELECTRONICS
- The capacitor grade viz. PG-8K
- The capacitance value __ MFD, rated voltage __VDC
- The surge voltage
- Capacity tolerance
- Climatic category
- Part number on non-standard capacitors
- CE marking

Useful life

Useful life is a period of time which the capacitor takes to reach "end of life".

For PG-8K capacitors the useful life is estimated as 2000 hours at maximum rated temperature, ripple current and voltages.

End of the defined as follows :

1. Catastrophic failure : capacitor short or open circuit
2. Mechanical failure : operation of safety vent or sleeve damage
3. Parametric failure :
   a. Capacitance change ±30%
   b. ESR exceed three times specified value
   c. Leakage current exceed specified value

The useful life for a known ripple current load and ambient temperature (Ta) °C is determined on the basis of the " Life graph" shown below.

Manufacturing Date Code Chart

The manufacturing code shall consists of four digits (alphanumeric). The first two shall denote the date (numeric). The third stands for the month (alpha-numeric). The fourth stands for the year (alphabet)

	Third space MONTH	Fourth space YEAR
01	1 = JANUARY	A = 2012
02	2 = FEBRUARY	B = 2013
03	3 = MARCH	C = 2014
.	4 = APRIL	D = 2015
.	5 = MAY	E = 2016
.	6 = JUNE	F = 2017
10	7 = JULY	G = 2018
11	8 = AUGUST	H = 2019
.	9 = SEPTEMBER	J = 2020
.	X = OCTOBER	K = 2021
.	Y = NOVEMBER	L = 2022
31	Z = DECEMBER	M = 2023

For example :

1. Manufacturing code 023A will mean 2nd March, 2012
2. Manufacturing code 10XA will mean 10th October, 2012

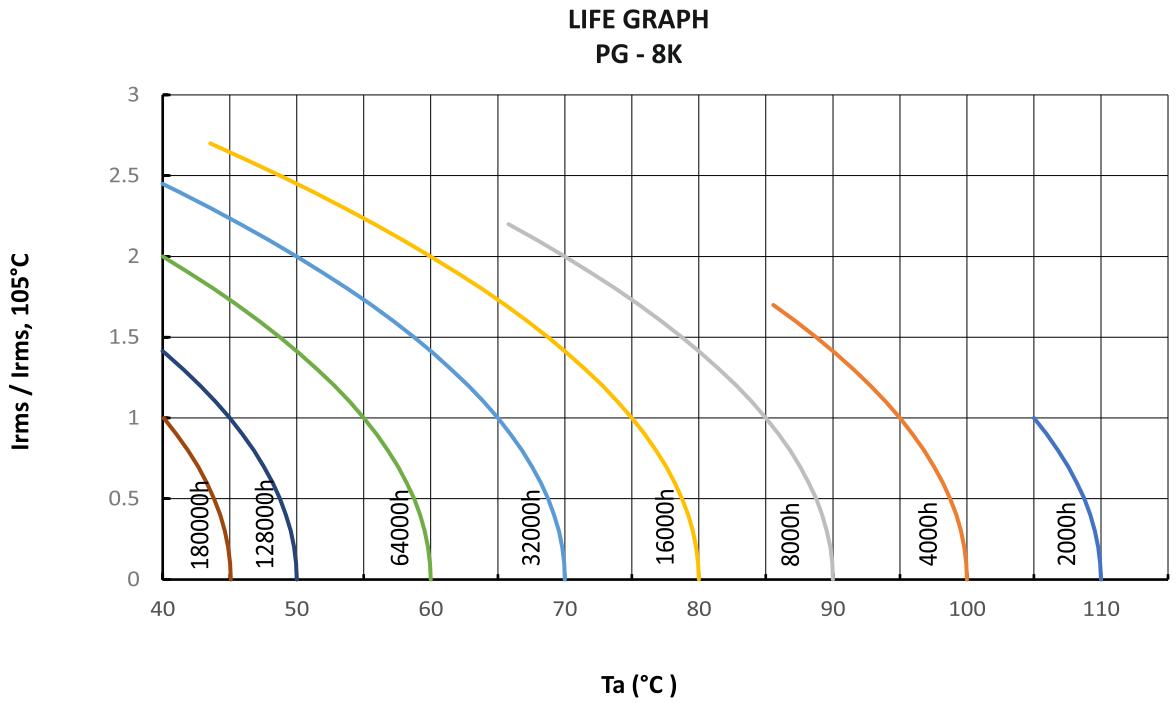

PG - 8K

-40°C +105°C

Standard Capacitor Values

Rated Voltage (VDC)	Surge Voltage (VDC)	Capacitance Nominal (MFD)	MAX ESR at 100 Hz, 25°C (miliOhm)	Ripple Current at 100 Hz, 85°C (Amps)	Ripple Current (Irms) at 100 Hz, 105°C (Amps)	Can size Nominal D x L mm	Case Code	Ordering code
50	60	4700	30.1	10.4	6	35x62	025	SA047000050AB025_ _ _ _M01
		6800	25.7	11.2	6.5	35x62	025	SA068000050AB025_ _ _ _M01
		10000	26.6	14.0	8.1	35x105	013	SA100000050AB013_ _ _ _M01
		10000	24.5	15.7	9.1	50x80	020	SA100000050AB020_ _ _ _M01
		15000	24.1	14.7	8.5	35x105	013	SA150000050AB013_ _ _ _M01
		22000	16.5	19.2	11.1	50x80	020	SA220000050AB020_ _ _ _M01
		33000	14.1	23.4	13.5	50x105	022	SA330000050AB022_ _ _ _M01
		47000	12.2	28.5	16.5	63x105	026	SA470000050AB026_ _ _ _M01
		68000	11.4	32.9	19	76x105	028	SA680000050AB028_ _ _ _M01
		100000	9.1	38.9	22.5	76x120	041	SA1000H0050AB041_ _ _ _M01
		150000	7.5	46.7	27	76x146	081	SA1500H0050AB081_ _ _ _M01
		220000	7.8	55.4	32	76x220	092	SA2200H0050AB092_ _ _ _M01
63	75	4700	26.5	11.1	6.4	35x62	025	SA047000063AB025_ _ _ _M01
		6800	22.2	12.1	7	35x62	025	SA068000063AB025_ _ _ _M01
		10000	19.7	16.3	9.4	35x105	013	SA100000063AB013_ _ _ _M01
		10000	19.7	17.6	10.15	50x80	020	SA100000063AB020_ _ _ _M01
		15000	17.4	18.7	10.8	50x80	020	SA150000063AB020_ _ _ _M01
		22000	15.2	22.5	13	50x105	022	SA220000063AB022_ _ _ _M01
		33000	13.0	27.7	16	63x105	026	SA330000063AB026_ _ _ _M01
		47000	11.4	32.9	19	76x105	028	SA470000063AB028_ _ _ _M01
		68000	10.3	39.8	23	76x146	081	SA680000063AB081_ _ _ _M01
		100000	6.1	57.1	33	90x145	095	SA1000H0063AB095_ _ _ _M01
		100000	6.2	62.3	36	76x220	092	SA1000H0063AB092_ _ _ _M01
		150000	4.8	76.8	44.4	90x220	094	SA1500H0063AB094_ _ _ _M01
75	90	4700	31.2	11.4	6.6	35x80	012	SA047000075AB012_ _ _ _M01
		6800	31.9	12.8	7.4	35x105	013	SA068000075AB013_ _ _ _M01
		10000	29.1	16.3	9.4	50x105	022	SA100000075AB022_ _ _ _M01
		15000	23.3	18.2	10.5	50x105	022	SA150000075AB022_ _ _ _M01
		22000	19.1	22.8	13.2	63x105	026	SA220000075AB026_ _ _ _M01
		33000	14.3	29.4	17	76x105	028	SA330000075AB028_ _ _ _M01
		47000	12.4	33.4	19.3	76x120	041	SA470000075AB041_ _ _ _M01
		68000	11.2	38.2	22.1	76x146	081	SA680000075AB081_ _ _ _M01
		100000	9.8	49.3	28.5	76x220	092	SA1000H0075AB092_ _ _ _M01
100	115	2200	56.1	7.6	4.4	35x62	025	SA022000100AB025_ _ _ _M01
		3300	52.3	8.8	5.1	35x80	012	SA033000100AB012_ _ _ _M01
		4700	43.9	10.9	6.3	35x105	013	SA047000100AB013_ _ _ _M01
		6800	34.2	13.3	7.7	50x80	020	SA068000100AB020_ _ _ _M01
		10000	21.7	18.9	10.9	50x105	022	SA100000100AB022_ _ _ _M01
		15000	18.3	23.4	13.5	63x105	026	SA150000100AB026_ _ _ _M01
		22000	17.2	26.8	15.5	76x105	028	SA220000100AB028_ _ _ _M01
		33000	13.6	34.6	20	76x146	081	SA330000100AB081_ _ _ _M01
		47000	11.5	41.5	24	90x145	095	SA470000100AB095_ _ _ _M01
		47000	12.8	43.3	25	76x220	092	SA470000100AB092_ _ _ _M01
		68000	10.0	48.8	28.2	76x220	092	SA680000100AB092_ _ _ _M01
		100000	6.9	64.4	37.2	90x220	094	SA1000H0100AB094_ _ _ _M01

Custom designed capacitors available

PG - 8K

-40°C +105°C

Standard Capacitor Values

Rated Voltage (VDC)	Surge Voltage (VDC)	Capacitance Nominal (MFD)	MAX ESR at 100 Hz, 25°C (miliOhm)	Ripple Current at 100 Hz, 85°C (Amps)	Ripple Current (Irms) at 100 Hz, 105°C (Amps)	Can size Nominal D x L mm	Case Code	Ordering code
150	172	1000	151.2	5.2	3	35x80	012	SA010000150AB012_ _ _ _M01
		1500	114.7	6.7	3.9	35x105	013	SA015000150AB013_ _ _ _M01
		2200	98.9	7.3	4.2	35x105	013	SA022000150AB013_ _ _ _M01
		3300	85.1	9.5	5.5	50x105	022	SA033000150AB022_ _ _ _M01
		4700	59.1	11.4	6.6	50x105	022	SA047000150AB022_ _ _ _M01
		6800	49.6	14.2	8.2	63x105	026	SA068000150AB026_ _ _ _M01
		10000	34.1	19.7	11.4	63x145	035	SA100000150AB035_ _ _ _M01
		12000	31.3	22.8	13.2	76x146	081	SA120000150AB081_ _ _ _M01
		15000	23.9	26.1	15.1	76x146	081	SA150000150AB081_ _ _ _M01
		22000	17.3	37.2	21.5	76x220	092	SA220000150AB092_ _ _ _M01
		33000	11.0	51.0	29.5	90x220	094	SA330000150AB094_ _ _ _M01
200	230	1000	141.6	5.4	3.1	35x80	012	SA010000200AB012_ _ _ _M01
		1500	94.3	7.4	4.3	35x105	013	SA015000200AB013_ _ _ _M01
		2200	72.2	9.2	5.3	50x80	020	SA022000200AB020_ _ _ _M01
		3300	69.1	10.6	6.1	50x105	022	SA033000200AB022_ _ _ _M01
		4700	64.3	12.5	7.2	63x105	026	SA047000200AB026_ _ _ _M01
		6800	47.8	16.1	9.3	76x105	028	SA068000200AB028_ _ _ _M01
		10000	25.9	25.1	14.5	76x146	081	SA100000200AB081_ _ _ _M01
		12000	19.3	29.1	16.8	76x146	081	SA120000200AB081_ _ _ _M01
		15000	18.3	32.9	19	90x145	095	SA150000200AB095_ _ _ _M01
		22000	14.4	40.7	23.5	76x220	092	SA220000200AB092_ _ _ _M01
		27000	12.7	47.5	27.44	90x220	094	SA270000200AB094_ _ _ _M01
250	288	1000	114.7	6.7	3.9	35x105	013	SA010000250AB020_ _ _ _M01
		1500	88.0	8.3	4.8	50x80	020	SA015000250AB020_ _ _ _M01
		2200	71.5	10.4	6	50x105	022	SA022000250AB022_ _ _ _M01
		3300	53.4	13.7	7.9	63x105	026	SA033000250AB026_ _ _ _M01
		4700	41.3	17.3	10	76x105	028	SA047000250AB028_ _ _ _M01
		6800	32.3	22.5	13	76x146	081	SA068000250AB081_ _ _ _M01
		10000	20.8	28.0	16.2	76x175	090	SA100000250AB090_ _ _ _M01
		12000	18.1	36.3	21	76x220	092	SA120000250AB092_ _ _ _M01
		15000	15.7	35.5	20.5	90X175	096	SA150000250AB096_ _ _ _M01
		15000	15.8	38.9	22.5	76x220	092	SA150000250AB092_ _ _ _M01
		22000	9.9	53.8	31.1	90x220	094	SA220000250AB094_ _ _ _M01
315	362	1000	126.7	6.9	4	50x80	020	SA010000315AB020_ _ _ _M01
		1500	107.2	8.5	4.9	50x105	022	SA015000315AB022_ _ _ _M01
		2200	66.1	12.3	7.1	63x105	026	SA022000315AB026_ _ _ _M01
		3300	58.6	14.5	8.4	76x105	028	SA033000315AB028_ _ _ _M01
		4700	37.5	18.2	10.5	76x105	028	SA047000315AB028_ _ _ _M01
		6800	27.8	24.2	14	76x146	081	SA068000315AB081_ _ _ _M01
		10000	22.1	32.9	19	76x220	092	SA100000315AB092_ _ _ _M01
		15000	16.4	41.7	24.1	90x220	094	SA150000315AB094_ _ _ _M01
		22000	11.0	51.0	29.5	90x220	094	SA220000315AB094_ _ _ _M01

Custom designed capacitors available

PG - 8K

-40°C +105°C

Standard Capacitor Values

Rated Voltage (VDC)	Surge Voltage (VDC)	Capacitance Nominal (MFD)	MAX ESR at 100 Hz, 25°C (miliOhm)	Ripple Current at 100 Hz, 85°C (Amps)	Ripple Current (Irms) at 100 Hz, 105°C (Amps)	Can size Nominal D x L mm	Case Code	Ordering code
350	385	1000	114.9	7.3	4.2	50x80	020	SA010000350AB020_ _ _ _M01
		1500	79.2	9.9	5.7	50x105	022	SA015000350AB022_ _ _ _M01
		2200	64.3	12.5	7.2	63x105	026	SA022000350AB026_ _ _ _M01
		3300	41.6	16.4	9.5	63x120	039	SA033000350AB039_ _ _ _M01
		3300	41.3	17.3	10	76x105	028	SA033000350AB028_ _ _ _M01
		4700	37.9	20.8	12	76x146	081	SA047000350AB081_ _ _ _M01
		6800	21.6	30.3	17.5	90x145	095	SA068000350AB095_ _ _ _M01
		6800	23.3	32.0	18.5	76x220	092	SA068000350AB092_ _ _ _M01
		10000	17.3	37.2	21.5	76x220	092	SA100000350AB092_ _ _ _M01
		15000	15.3	43.3	25	90x220	094	SA150000350AB094_ _ _ _M01
400	440	1000	109.6	7.4	4.3	50x80	020	SA010000400AB020_ _ _ _M01
		1500	76.5	10.0	5.8	50x105	022	SA015000400AB022_ _ _ _M01
		2200	60.9	12.8	7.4	63x105	026	SA022000400AB026_ _ _ _M01
		3300	46.2	17.0	9.8	63x145	035	SA033000400AB035_ _ _ _M01
		4700	36.6	21.1	12.2	76x146	081	SA047000400AB081_ _ _ _M01
		6800	33.2	26.8	15.5	76x220	092	SA068000400AB092_ _ _ _M01
		10000	19.7	38.1	22	90x220	094	SA100000400AB094_ _ _ _M01
		12000	16.6	41.5	24	90x220	094	SA120000400AB094_ _ _ _M01
415	456	1000	100.1	7.8	4.5	50x80	020	SA010000415AB020_ _ _ _M01
		1500	73.9	10.2	5.9	50x105	022	SA015000415AB022_ _ _ _M01
		2200	60.0	14.4	8.3	76x105	028	SA022000415AB028_ _ _ _M01
		3300	43.5	19.4	11.2	76x146	081	SA033000415AB081_ _ _ _M01
		4700	32.8	24.6	14.2	90x145	095	SA047000415AB095_ _ _ _M01
		6800	24.9	31.0	17.9	76x220	092	SA068000415AB092_ _ _ _M01
		10000	17.0	41.0	23.7	90x220	094	SA100000415AB094_ _ _ _M01
		12000	14.7	44.1	25.5	90x220	094	SA120000415AB094_ _ _ _M01
450	495	1000	98.9	8.8	5.1	50x105	022	SA010000450AB022_ _ _ _M01
		1500	81.4	11.1	6.4	63x105	026	SA015000450AB026_ _ _ _M01
		2200	57.2	14.7	8.5	76x105	028	SA022000450AB028_ _ _ _M01
		3300	36.6	21.1	12.2	76x146	081	SA033000450AB081_ _ _ _M01
		4700	31.8	22.7	13.1	76x146	081	SA047000450AB081_ _ _ _M01
		6800	21.9	33.0	19.1	76x220	092	SA068000450AB092_ _ _ _M01
		10000	14.0	45.2	26.1	90x220	094	SA100000450AB094_ _ _ _M01
500	550	1000	127.1	7.8	4.5	50x105	022	SA010000500AB022_ _ _ _M01
		1500	86.7	10.7	6.2	63x105	026	SA015000500AB026_ _ _ _M01
		2200	63.0	14.0	8.1	76x105	028	SA022000500AB028_ _ _ _M01
		3300	42.0	19.7	11.4	76x146	081	SA033000500AB081_ _ _ _M01
		3300	38.7	19.7	11.4	90x105	093	SA033000500AB093_ _ _ _M01
		4700	31.0	25.3	14.6	90x146	095	SA047000500AB095_ _ _ _M01
		4700	36.9	25.4	14.7	76x220	092	SA047000500AB092_ _ _ _M01
		5600	24.6	28.4	16.4	90x175	096	SA056000500AB096_ _ _ _M01
		6800	21.0	33.7	19.5	76x220	092	SA068000500AB092_ _ _ _M01

Custom designed capacitors available

PG - 8K

-40°C +105°C

Terminal Style And Dimension With Round Insert

Screw Terminal Type AEST/AEST-D

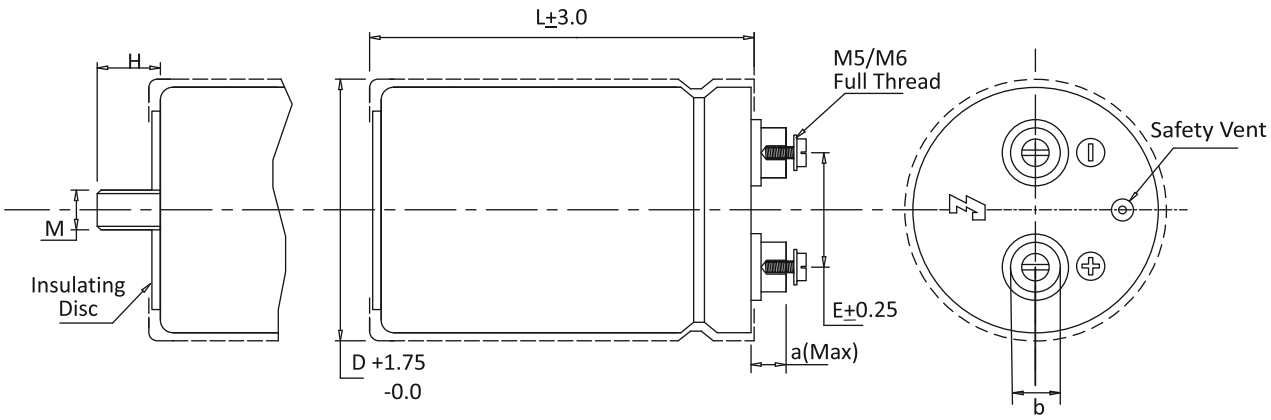

AEST -Screw terminals with plain insulated base.

AEST-D - Screw terminals with stud mounting.

Dimension in mm.

Terminal	D	E	L	a (Max)	b±0.1	M	H±1.0
M5	35	12.6	62	7.8	9.5	—	—
M5	35	12.6	80	7.8	9.5	—	—
M5	35	12.6	105	7.8	9.5	---	---
M5	50	22.1	80	7.8	9.5	M 12	17.0
M5	50	22.1	105	7.8	9.5	M 12	17.0
M5	50	22.1	120	7.8	9.5	M 12	17.0
M5	63	28.5	105	7.8	12.0	M 12	17.0
M5	63	28.5	120	7.8	12.0	M 12	17.0
M5	63	28.5	146	7.8	12.0	M 12	17.0
M5	76	31.6	105	7.8	12.0	M 12	17.0
M5	76	31.6	120	7.8	12.0	M 12	17.0
M5	76	31.6	146	7.8	12.0	M 12	17.0
M5	76	31.6	175	7.8	12.0	M 12	17.0
M5	76	31.6	220	7.8	12.0	M 12	17.0
M5	76	31.6	240	7.8	12.0	M 12	17.0
M6	76	31.6	105	5.3*	16.0	M 12	17.0
M6	76	31.6	120	5.3*	16.0	M 12	17.0
M6	76	31.6	146	5.3*	16.0	M 12	17.0
M6	76	31.6	175	5.3*	16.0	M 12	17.0
M6	76	31.6	220	5.3*	16.0	M 12	17.0
M6	76	31.6	240	5.3*	16.0	M 12	17.0
M6	90	32	105	5.3*	16.0	M 12	17.0
M6	90	32	146	5.3*	16.0	M 12	17.0
M6	90	32	175	5.3*	16.0	M 12	17.0
M6	90	32	220	5.3*	16.0	M 12	17.0
M6	90	32	240	5.3*	16.0	M 12	17.0

* Low Post Design

PG - 8K

-40°C +105°C

Terminal Style And Dimension With Across Flat Insert

Screw Terminal Type AEST/AEST-D

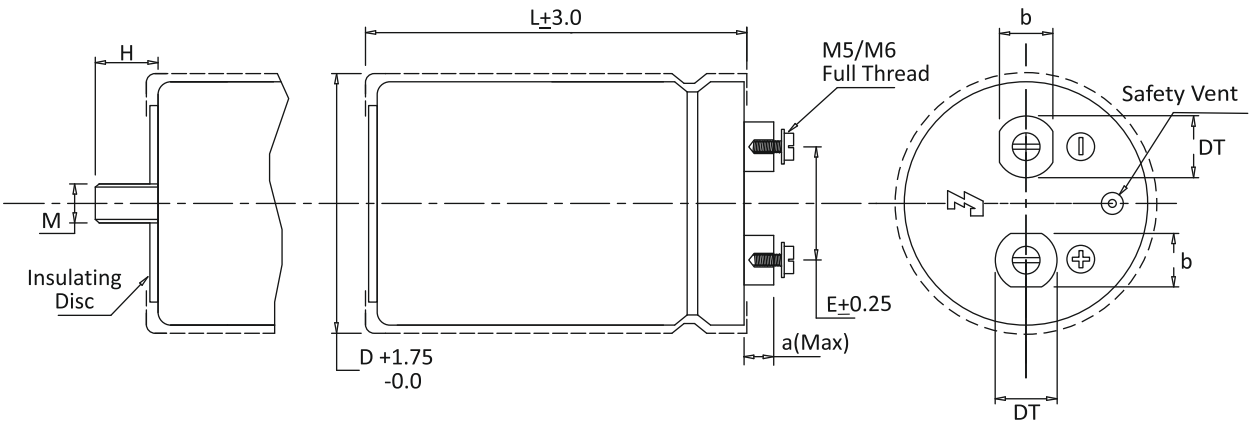

AEST -Screw terminals with plain insulated base.

AEST-D - Screw terminals with stud mounting.

Dimension in mm.

Terminal	D	E	L	a (Max)	b	DT	M	H±1.0
M5	50	22.1	80	5.5	10	13	12	17
M5	50	22.1	105	5.5	10	13	12	17
M5	50	22.1	120	5.5	10	13	12	17
M6	63	28.5	105	6.5	13	15	12	17
M6	63	28.5	120	6.5	13	15	12	17
M6	63	28.5	146	6.5	13	15	12	17
M6	76	31.6	105	6.5	13	15	12	17
M6	76	31.6	120	6.5	13	15	12	17
M6	76	31.6	146	6.5	13	15	12	17
M6	76	31.6	175	6.5	13	15	12	17
M6	76	31.6	220	6.5	13	15	12	17
M6	76	31.6	240	6.5	13	15	12	17
M6	90	32	105	6.5	13	15	12	17
M6	90	32	120	6.5	13	15	12	17
M6	90	32	146	6.5	13	15	12	17
M6	90	32	175	6.5	13	15	12	17
M6	90	32	220	6.5	13	15	12	17
M6	90	32	240	6.5	13	15	12	17
M6	100	32	105	6.5	13	15	12	17
M6	100	32	120	6.5	13	15	12	17
M6	100	32	146	6.5	13	15	12	17
M6	100	32	175	6.5	13	15	12	17
M6	100	32	220	6.5	13	15	12	17
M6	100	32	240	6.5	13	15	12	17
M6	120	41.50	105	6.5	13	15	12	17
M6	120	41.50	120	6.5	13	15	12	17
M6	120	41.50	146	6.5	13	15	12	17
M6	120	41.50	175	6.5	13	15	12	17
M6	120	41.50	220	6.5	13	15	12	17
M6	120	41.50	240	6.5	13	15	12	17

Terminal Style And Dimension

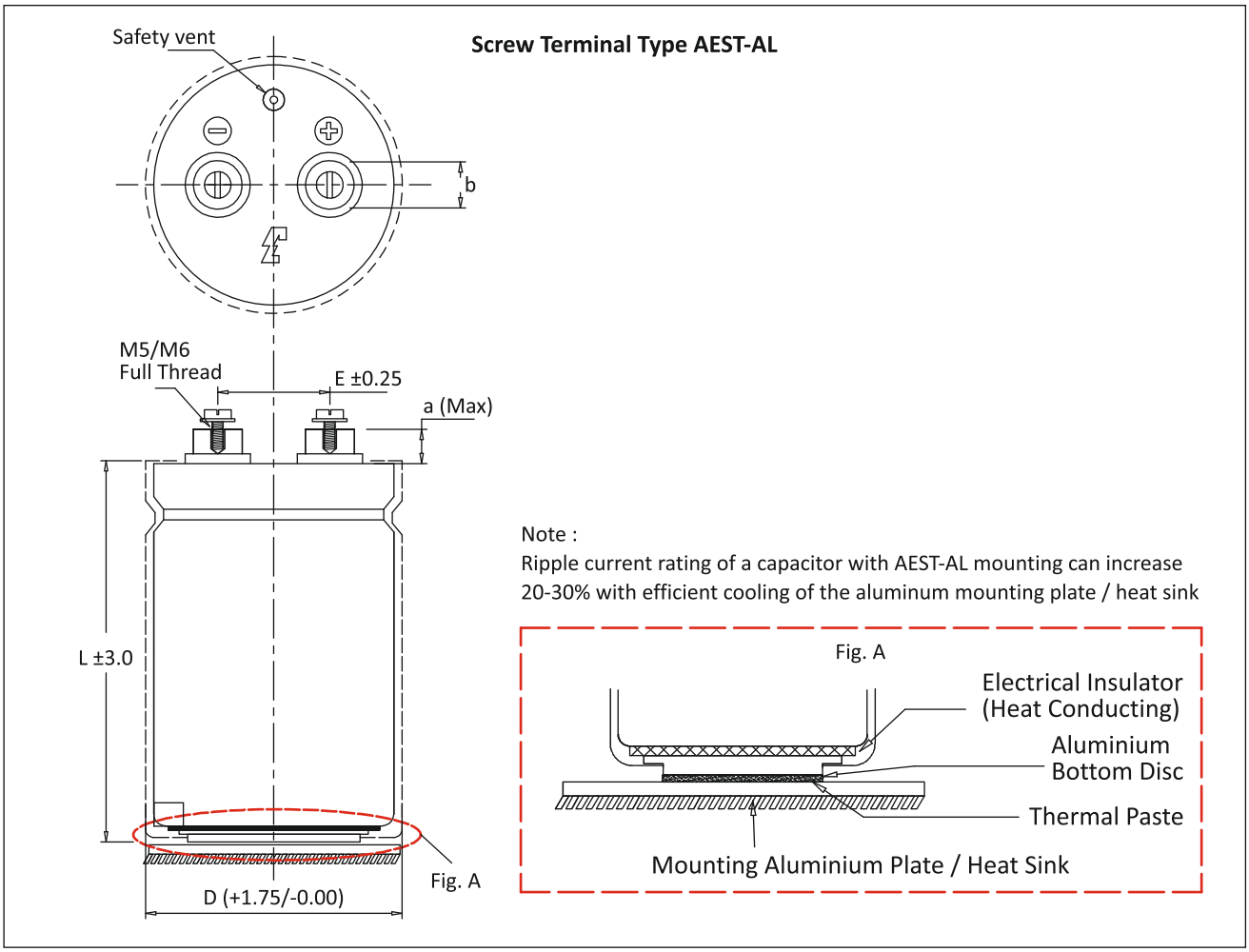

Dimension in mm.

Terminal	D	E	L	a (Max)	b±0.1
M5	63	28.5	105	7.8	12
M5	63	28.5	120	7.8	12
M5	63	28.5	146	7.8	12
M5	76	31.6	105	7.8	12
M5	76	31.6	120	7.8	12
M5	76	31.6	146	7.8	12
M5	76	31.6	175	7.8	12
M5	76	31.6	220	7.8	12
M5	76	31.6	240	7.8	12
M6	76	31.6	105	5.3 *	16
M6	76	31.6	120	5.3 *	16
M6	76	31.6	146	5.3 *	16
M6	76	31.6	175	5.3 *	16
M6	76	31.6	220	5.3 *	16
M6	76	31.6	240	5.3 *	16
M6	90	32	105	5.3 *	16
M6	90	32	146	5.3 *	16
M6	90	32	175	5.3 *	16
M6	90	32	220	5.3 *	16
M6	90	32	240	5.3 *	16

* Low Post Design

Mounting Accessories

- **Insulating Nylon Nut and Washers for Cans with Bottom Stud**

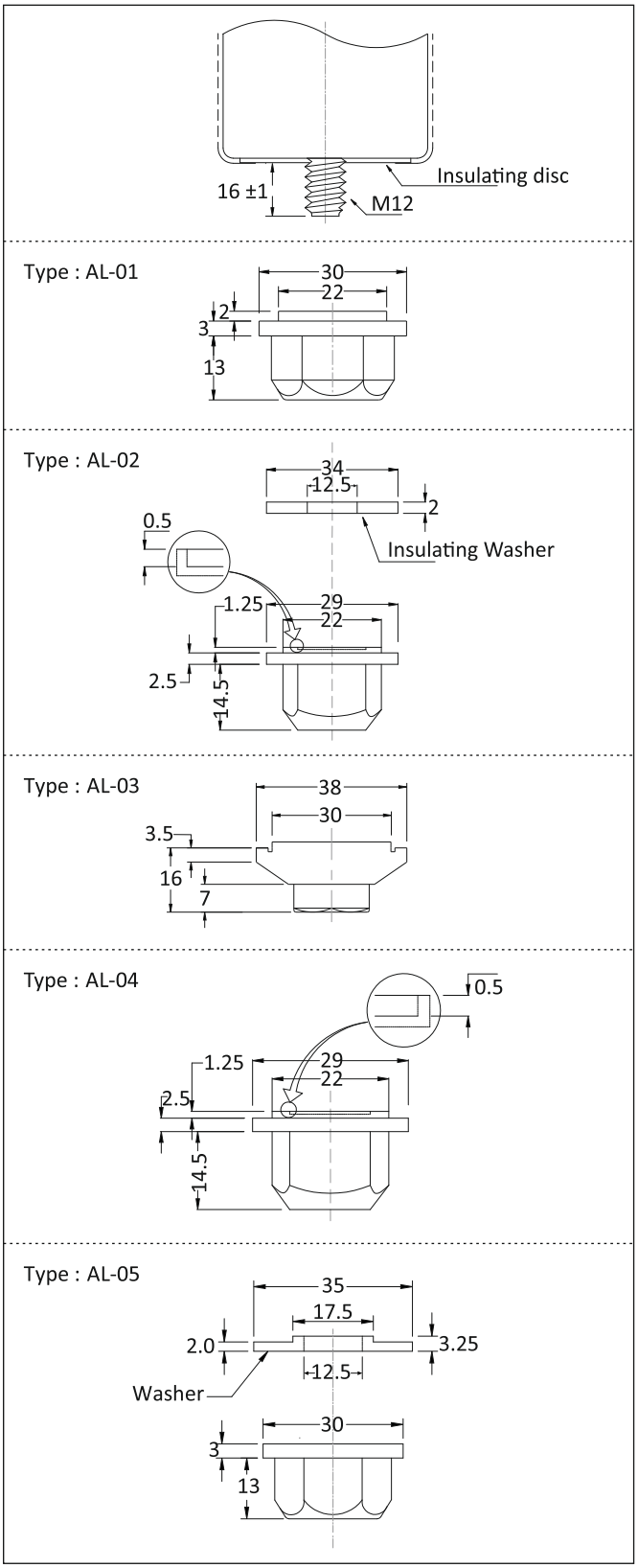

- **Vertical Mounting Clamps**

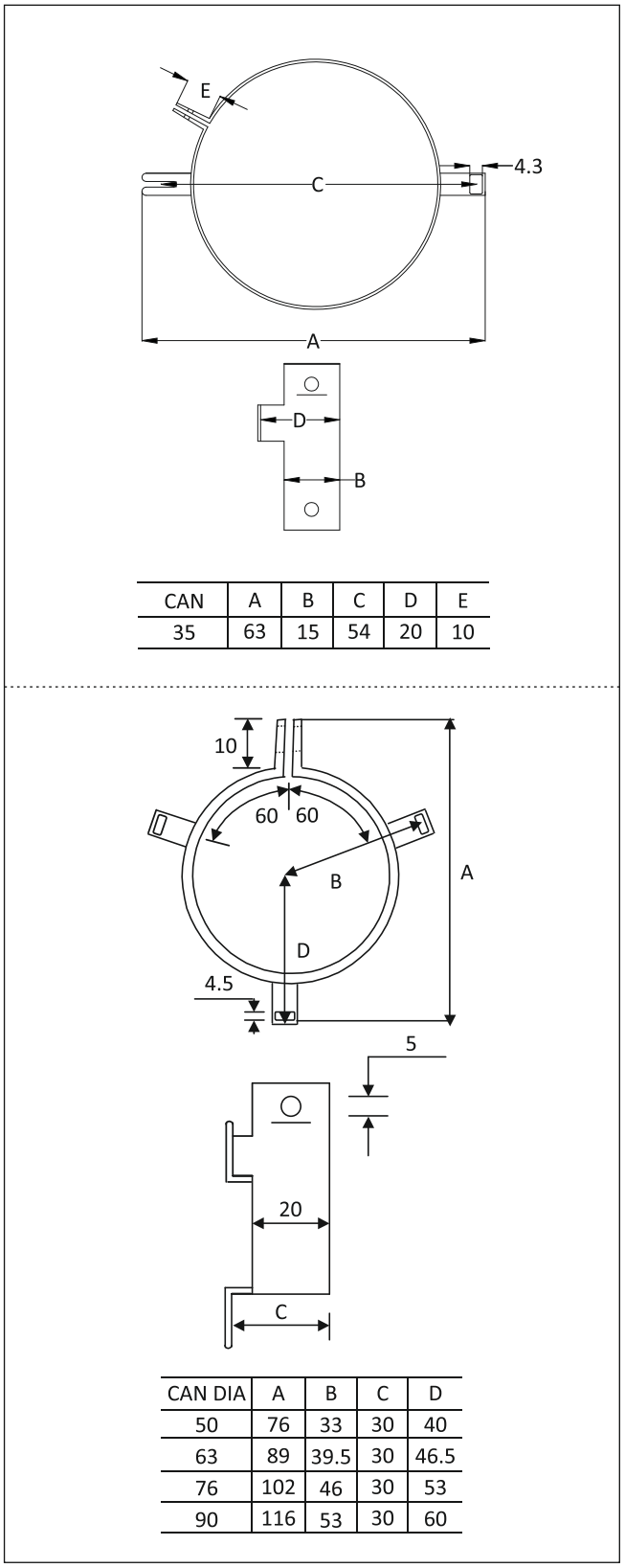

CAN	A	B	C	D	E
35	63	15	54	20	10

CAN DIA	A	B	C	D
50	76	33	30	40
63	89	39.5	30	46.5
76	102	46	30	53
90	116	53	30	60

Dimension in mm.

Catalogue No. AEPL PG-8K-JULY-2020 (Rev 01)

The specification shown herein (page 1 to 9) pertain to the current manufacturing range of the Company. The Company reserves the right to change and /or modify any part of or whole of the specifications as a result of research and development and as may be necessary, without prior notice.

PG - LL9 Long Life Grade -40°C +85°C

Specifications

- **Voltage range :** 315 VDC to 450 VDC
- **Can size :** 50ϕ x 80mm to 120ϕ x 240mm
- **Operating Temperature range :** -40°C to + 85°C
- **Capacitance :** 1000 MFD to 38000 MFD
  Tolerance ± 20%
- **Leakage current:** The max. leakage current (IL) is given by the formula:
  IL = 0.003 CV (microamps)
  C = capacitance in microfarads
  V = DC rated voltage
  Pre-conditioning of the capacitors prior to testing for leakage current is essential.
- **Ripple Current:** All capacitors withstand rms ripple current at 100 Hz at 85°C. When capacitors operate at temperatures other than 85°C,the permissible rms ripple current at 85°C should be multiplied by the factors given below :

+40°C	+45°C	+50°C	+65°C
2.2	2.1	1.9	1.6

Where capacitors are required to operate at frequencies other than 100 Hz, the multiplying factors given below, may be used to determine the ripple current capacity, at that frequency.

Frequency Hz	100	120	250	500	1k to10k	>10K
Multiplying Factor	1.0	1.02	1.05	1.20	1.32	1.35

- **Notes :**

1. Can is negative, However, it is isolated with a PVC insulating sleeve and mylar end-disc.
2. The base stud is also negative and can be insulated with a nylon nut. Please see the page regarding mounting accessories for details.
3. Maximum ripple current for each capacitor diameter .

Capacitor Diameter (mm)	50	63	76	90	100	120
Max. Ripple Current (Amps)	20	40	40	72	72	72

Application

Long Life Grade for High Voltage, Compact design, High Ripple Current Applications like PWM Inverters, High KVA On-Line UPS, Frequency Converters, AC Drives, Telecom SMPS. Static frequency inverters / servo-drives

Capacitor mounting

Capacitors are available in screw terminals in three mounting styles

AEST - Screw terminals with plain insulated base. *see page 6,7*

AEST-D - Screw terminals with stud mounting. *see page 6,7*

AEST-AL - Capacitor with aluminium bottom disc. *see page 8*

Capacitor Terminal Style

Capacitors are available in two different terminal style, round and across flat. Below table summarizes the available terminal styles in different capacitors diameter

Capacitors Diameter (mm)	50	63	76	90	100	120
Terminal Style - Round	●	●	●	●		
Terminal Style - Across Flat	●	●	●	●	●	●

For details see pages 6, 7, 8

Marking on capacitors

Each capacitor will have the following information printed on it, sequentally:

- The Company's symbol followed by the words ALCON ELECTRONICS
- The capacitor grade viz. PG-LL9
- The capacitance value __ MFD, rated voltage __VDC
- The surge voltage
- Capacity tolerance
- Climatic category
- Part number on non-standard capacitors
- CE marking

PG - LL9 Long Life Grade -40°C +85°C

Useful life

Useful life is a period of time which the capacitor takes to reach "end of life".

For PG-LL9 capacitors the useful life is estimated as 15000 hours at maximum rated temperature, ripple current and voltages.

End of the defined as follows :

1. Catastrophic failure : capacitor short or open circuit
2. Mechanical failure : operation of safety vent or sleeve damage
3. Parametric failure :
   a. Capacitance change ±30%
   b. ESR exceed three times specified value
   c. Leakage current exceed specified value

The useful life for a known ripple current load and ambient temperature (Ta) °C is determined on the basis of the " Life graph" shown below.

Manufacturing Date Code Chart

The manufacturing code shall consists of four digits (alphanumeric). The first two shall denote the date (numeric). The third stands for the month (alpha-numeric). The fourth stands for the year (alphabet)

First two spaces DATE	Third space MONTH	Fourth space YEAR
01	1 = JANUARY	A = 2012
02	2 = FEBRUARY	B = 2013
03	3 = MARCH	C = 2014
.	4 = APRIL	D = 2015
.	5 = MAY	E = 2016
.	6 = JUNE	F = 2017
10	7 = JULY	G = 2018
11	8 = AUGUST	H = 2019
.	9 = SEPTEMBER	J = 2020
.	X = OCTOBER	K = 2021
.	Y = NOVEMBER	L = 2022
31	Z = DECEMBER	M = 2023

For example :

1. Manufacturing code 023A will mean 2nd March, 2012
2. Manufacturing code 10XA will mean 10th October, 2012

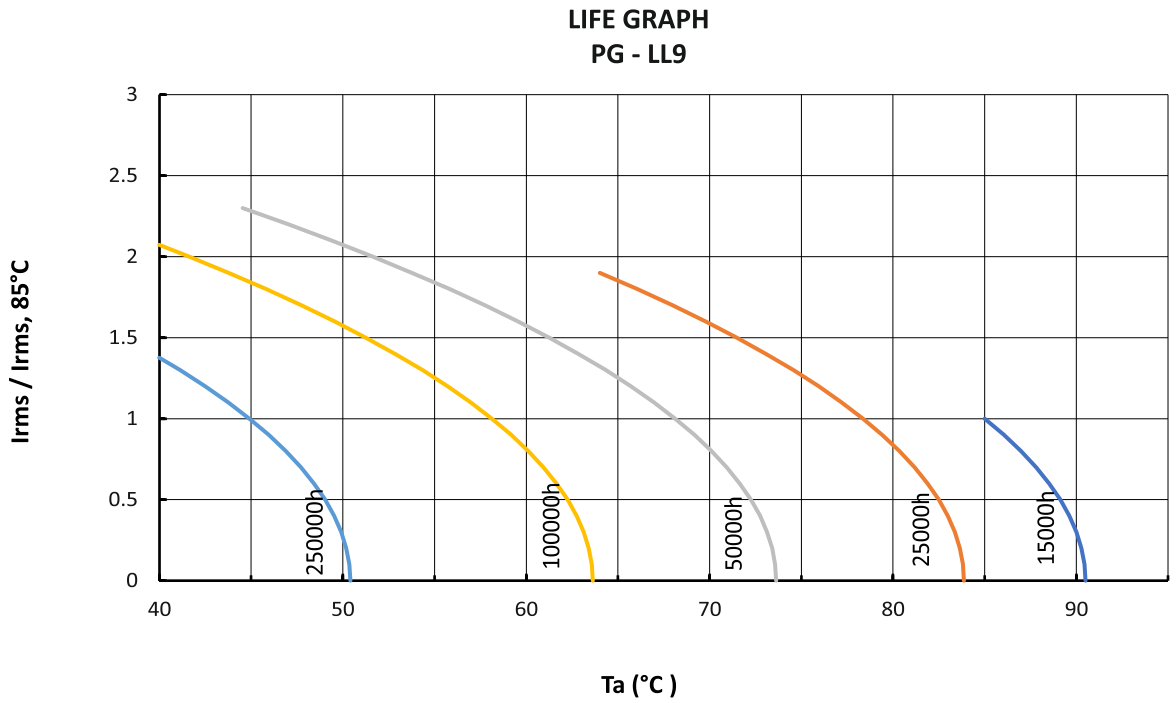

PG - LL9 Long Life Grade -40°C +85°C

Standard Capacitor Values

Rated Voltage (VDC)	Surge Voltage (VDC)	Capacitance Nominal (MFD)	MAX ESR at 100 Hz, 25°C (miliohm)	Ripple Current (Irms) at 100 Hz, 85°C (Amps)	Can size Nominal D x L mm	Case code	Ordering code
315	362	2200	77.08	7	50x105	022	SA022000315AC022_ _ _ _M01
		3300	62.31	8.9	63x105	026	SA033000315AC026_ _ _ _M01
		3900	44.77	10.5	63x105	026	SA039000315AC026_ _ _ _M01
		4700	43.47	11.8	63x145	035	SA047000315AC035_ _ _ _M01
		4700	42.12	12.1	76x105	028	SA047000315AC028_ _ _ _M01
		5600	35.93	13.1	76x105	028	SA056000315AC028_ _ _ _M01
		6800	31.59	15.4	76x146	081	SA068000315AC081_ _ _ _M01
		8200	30.21	18.0	76x220	092	SA082000315AC092_ _ _ _M01
		8200	26.99	18.0	100X105	082	SA082000315AC082_ _ _ _M01
		10000	28.48	18.5	76x220	092	SA100000315AC092_ _ _ _M01
		10000	24.23	20.1	100X120	083	SA100000315AC083_ _ _ _M01
		12000	18.50	23	76x220	092	SA120000315AC092_ _ _ _M01
		12000	21.74	23	100X146	084	SA120000315AC084_ _ _ _M01
		12000	18.50	23	120X105	086	SA120000315AC086_ _ _ _M01
		15000	15.41	25.2	76x220	092	SA150000315AC092_ _ _ _M01
		15000	16.01	27.5	120X120	087	SA150000315AC087_ _ _ _M01
		18000	14.00	31	100X175	085	SA180000315AC085_ _ _ _M01
		22000	12.68	36	100X220	099	SA220000315AC099_ _ _ _M01
		27000	11.46	38	120X175	042	SA270000315AC042_ _ _ _M01
		38000	10.25	46	120X240	044	SA380000315AC044_ _ _ _M01
350	385	1500	92.64	5.8	50x80	020	SA015000350AC020_ _ _ _M01
		2200	72.85	7.2	50x105	022	SA022000350AC022_ _ _ _M01
		3300	58.31	9.2	63x105	026	SA033000350AC026_ _ _ _M01
		3900	48.38	10.1	63x105	026	SA039000350AC026_ _ _ _M01
		4700	37.53	12.7	63x145	035	SA047000350AC035_ _ _ _M01
		4700	37.64	12.8	76x105	028	SA047000350AC028_ _ _ _M01
		5600	33.34	13.6	76x105	028	SA056000350AC028_ _ _ _M01
		6800	29.27	16.0	76x145	081	SA068000350AC081_ _ _ _M01
		8200	27.11	19.0	76x220	092	SA082000350AC092_ _ _ _M01
		8200	26.99	18.0	100X105	082	SA082000350AC082_ _ _ _M01
		10000	18.66	22.9	76x220	092	SA100000350AC092_ _ _ _M01
		10000	18.58	22.9	100X120	083	SA100000350AC083_ _ _ _M01
		12000	16.85	24.1	76x220	092	SA120000350AC092_ _ _ _M01
		12000	17.01	26.0	100X145	084	SA120000350AC084_ _ _ _M01
		12000	16.99	24.0	120X120	087	SA120000350AC087_ _ _ _M01
		15000	13.62	29.2	90x220	094	SA150000350AC094_ _ _ _M01
		15000	14.00	31.0	100X175	085	SA150000350AC085_ _ _ _M01
		18000	11.64	29.0	120X145	088	SA180000350AC088_ _ _ _M01
		22000	11.38	38.0	100X220	099	SA220000350AC099_ _ _ _M01
		27000	9.84	41.0	120X175	042	SA270000350AC042_ _ _ _M01
		33000	9.13	47.0	120X220	043	SA330000350AC043_ _ _ _M01
		38000	8.02	52.0	120X240	044	SA380000350AC044_ _ _ _M01

Custom designed capacitors available

PG - LL9 Long Life Grade -40°C +85°C

Standard Capacitor Values

Rated Voltage (VDC)	Surge Voltage (VDC)	Capacitance Nominal (MFD)	MAX ESR at 100 Hz, 25°C (miliohm)	Ripple Current (Irms) at 100 Hz, 85°C (Amps)	Can size Nominal D x L mm	Case code	Ordering code
400	440	1500	89.53	5.9	50x105	022	SA015000400AC022_ _ _ _M01
		2200	70.87	7.3	63x105	026	SA022000400AC026_ _ _ _M01
		3300	54.69	9.5	63x105	026	SA033000400AC026_ _ _ _M01
		3900	44.28	11.8	76x105	028	SA039000400AC028_ _ _ _M01
		4700	35.39	13.2	76x105	028	SA047000400AC028_ _ _ _M01
		5600	33.30	15.0	76x145	081	SA056000400AC081_ _ _ _M01
		5600	32.12	16.5	100X105	082	SA056000400AC082_ _ _ _M01
		6800	25.62	17.1	76x146	081	SA068000400AC081_ _ _ _M01
		6800	25.63	19.5	100X120	083	SA068000400AC083_ _ _ _M01
		8200	20.62	19.0	90x145	095	SA082000400AC095_ _ _ _M01
		8200	20.93	22.0	100X145	084	SA082000400AC084_ _ _ _M01
		10000	17.72	23.5	76x220	092	SA100000400AC092_ _ _ _M01
		10000	17.91	26.0	120X120	087	SA100000400AC087_ _ _ _M01
		12000	15.25	27.6	90x220	094	SA120000400AC094_ _ _ _M01
		12000	14.94	30.0	100X175	085	SA120000400AC085_ _ _ _M01
		18000	13.02	37.0	100X240	045	SA180000400AC045_ _ _ _M01
		22000	11.82	32.0	120X220	043	SA220000400AC043_ _ _ _M01
		27000	10.25	46.0	120X240	044	SA270000400AC044_ _ _ _M01
415	456	1500	89.39	6.5	50x105	022	SA015000415AC022_ _ _ _M01
		2200	69.95	8.4	63x105	026	SA022000415AC026_ _ _ _M01
		3300	52.87	10.8	76x105	028	SA033000415AC028_ _ _ _M01
		3900	42.82	12.0	76x105	028	SA039000415AC028_ _ _ _M01
		4700	31.46	14.0	76x105	028	SA047000415AC028_ _ _ _M01
		5600	30.39	15.7	76x145	081	SA056000415AC081_ _ _ _M01
		5600	30.26	17.0	100X105	082	SA056000415AC082_ _ _ _M01
		6800	23.12	18.0	76x146	081	SA068000415AC081_ _ _ _M01
		6800	23.19	20.5	100X120	083	SA068000415AC083_ _ _ _M01
		8200	19.33	22.5	76x220	092	SA082000415AC092_ _ _ _M01
		8200	19.16	24.5	100X145	084	SA082000415AC084_ _ _ _M01
		8200	18.92	24.0	120X105	086	SA082000415AC086_ _ _ _M01
		10000	15.66	25.0	76x220	092	SA100000415AC092_ _ _ _M01
		10000	16.01	27.5	120X120	087	SA100000415AC087_ _ _ _M01
		12000	14.30	28.5	90x220	094	SA120000415AC094_ _ _ _M01
		12000	13.86	32.0	120X145	088	SA120000415AC088_ _ _ _M01
		12000	13.56	31.5	100X175	085	SA120000415AC085_ _ _ _M01
		15000	32.45	22.5	100X220	099	SA150000415AC099_ _ _ _M01
		18000	29.76	27.0	100X240	045	SA180000415AC045_ _ _ _M01
		18000	31.28	23.0	120X175	042	SA180000415AC042_ _ _ _M01
		22000	28.73	26.5	120X220	043	SA220000415AC043_ _ _ _M01
		27000	25.80	29.0	120X240	044	SA270000415AC044_ _ _ _M01

Custom designed capacitors available

PG - LL9 Long Life Grade -40°C +85°C

Standard Capacitor Values

Rated Voltage (VDC)	Surge Voltage (VDC)	Capacitance Nominal (MFD)	MAX ESR at 100 Hz, 25°C (miliohm)	Ripple Current (Irms) at 100 Hz, 85°C (Amps)	Can size Nominal D x L mm	Case code	Ordering code
450	495	1000	141.08	4.7	50x80	020	SA010000450AC020_ _ _ _M01
		1500	86.70	6.6	50x105	022	SA015000450AC022_ _ _ _M01
		2200	65.21	8.7	63x105	026	SA022000450AC026_ _ _ _M01
		3300	48.25	11.2	63x145	035	SA033000450AC035_ _ _ _M01
		3300	48.29	11.3	76x105	028	SA033000450AC028_ _ _ _M01
		4700	32.43	15.2	76x146	081	SA047000450AC081_ _ _ _M01
		4700	32.12	16.5	100X105	082	SA047000450AC082_ _ _ _M01
		5600	29.27	16.0	76x146	081	SA056000450AC081_ _ _ _M01
		5600	29.42	18.2	100X120	083	SA056000450AC083_ _ _ _M01
		6800	24.23	20.1	76x220	092	SA068000450AC092_ _ _ _M01
		6800	23.58	21.5	120X105	086	SA068000450AC086_ _ _ _M01
		8200	17.72	23.5	76x220	092	SA082000450AC092_ _ _ _M01
		8200	17.91	26.0	120X120	087	SA082000450AC087_ _ _ _M01
		10000	16.54	26.5	90x220	094	SA100000450AC094_ _ _ _M01
		10000	17.16	28.0	100X175	085	SA100000450AC085_ _ _ _M01
		12000	16.88	29.0	120X145	088	SA120000450AC088_ _ _ _M01
		15000	15.42	34.0	100X240	045	SA150000450AC045_ _ _ _M01
		18000	13.97	38.0	120X220	043	SA180000450AC043_ _ _ _M01
		22000	12.30	42.0	120X240	044	SA220000450AC044_ _ _ _M01

Custom designed capacitors available

PG - LL9 Long Life Grade -40°C +85°C

Terminal Style And Dimension With Round Insert

Screw Terminal Type AEST/AEST-D

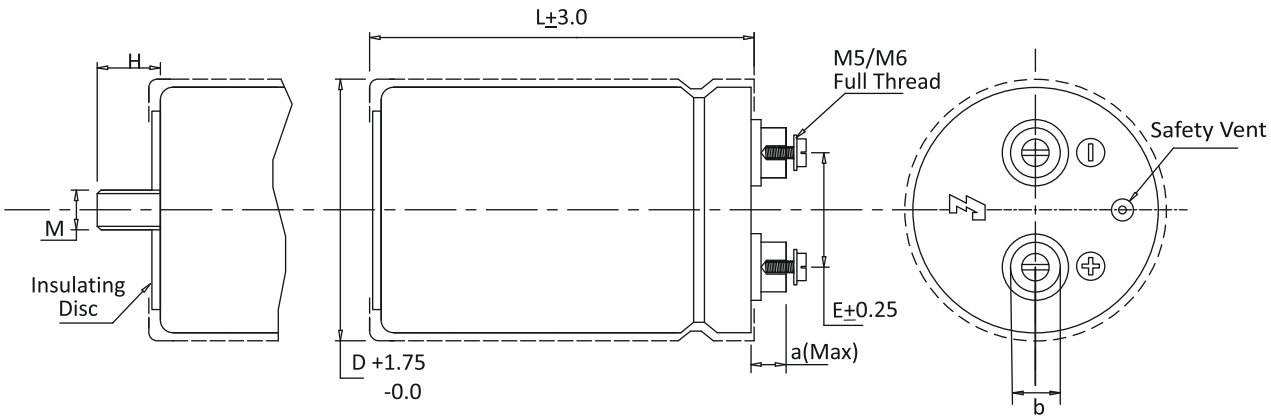

AEST -Screw terminals with plain insulated base.

AEST-D - Screw terminals with stud mounting.

Dimension in mm.

Terminal	D	E	L	a (Max)	b±0.1	M	H±1.0
M5	35	12.6	62	7.8	9.5	—	—
M5	35	12.6	80	7.8	9.5	—	—
M5	35	12.6	105	7.8	9.5	---	---
M5	50	22.1	80	7.8	9.5	M 12	17.0
M5	50	22.1	105	7.8	9.5	M 12	17.0
M5	50	22.1	120	7.8	9.5	M 12	17.0
M5	63	28.5	105	7.8	12.0	M 12	17.0
M5	63	28.5	120	7.8	12.0	M 12	17.0
M5	63	28.5	146	7.8	12.0	M 12	17.0
M5	76	31.6	105	7.8	12.0	M 12	17.0
M5	76	31.6	120	7.8	12.0	M 12	17.0
M5	76	31.6	146	7.8	12.0	M 12	17.0
M5	76	31.6	175	7.8	12.0	M 12	17.0
M5	76	31.6	220	7.8	12.0	M 12	17.0
M5	76	31.6	240	7.8	12.0	M 12	17.0
M6	76	31.6	105	5.3*	16.0	M 12	17.0
M6	76	31.6	120	5.3*	16.0	M 12	17.0
M6	76	31.6	146	5.3*	16.0	M 12	17.0
M6	76	31.6	175	5.3*	16.0	M 12	17.0
M6	76	31.6	220	5.3*	16.0	M 12	17.0
M6	76	31.6	240	5.3*	16.0	M 12	17.0
M6	90	32	105	5.3*	16.0	M 12	17.0
M6	90	32	146	5.3*	16.0	M 12	17.0
M6	90	32	175	5.3*	16.0	M 12	17.0
M6	90	32	220	5.3*	16.0	M 12	17.0
M6	90	32	240	5.3*	16.0	M 12	17.0

* Low Post Design

PG - LL9 Long Life Grade -40°C +85°C

Terminal Style And Dimension With Across Flat Insert

Screw Terminal Type AEST/AEST-D

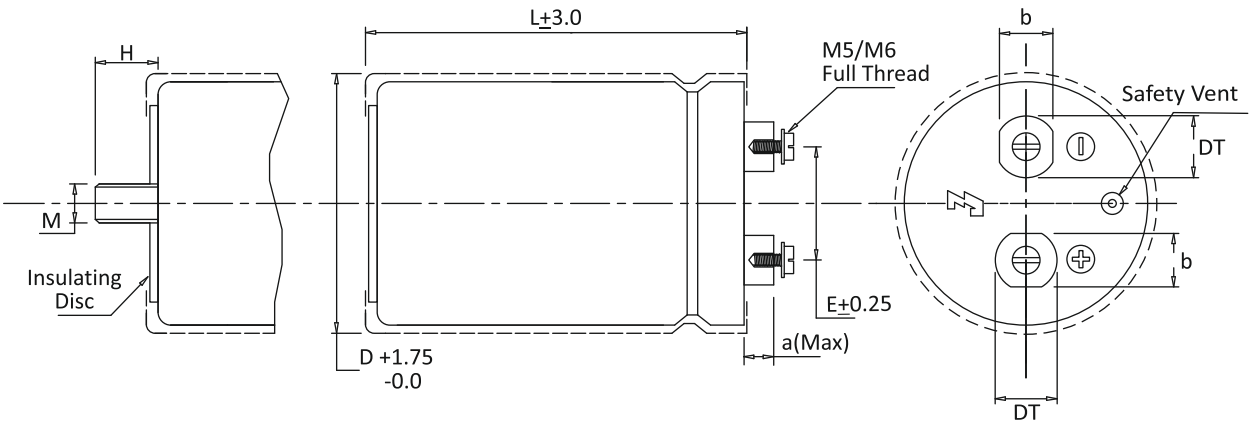

AEST -Screw terminals with plain insulated base.

AEST-D - Screw terminals with stud mounting.

Dimension in mm.

Terminal	D	E	L	a (Max)	b	DT	M	H±1.0
M5	50	22.1	80	5.5	10	13	12	17
M5	50	22.1	105	5.5	10	13	12	17
M5	50	22.1	120	5.5	10	13	12	17
M6	63	28.5	105	6.5	13	15	12	17
M6	63	28.5	120	6.5	13	15	12	17
M6	63	28.5	146	6.5	13	15	12	17
M6	76	31.6	105	6.5	13	15	12	17
M6	76	31.6	120	6.5	13	15	12	17
M6	76	31.6	146	6.5	13	15	12	17
M6	76	31.6	175	6.5	13	15	12	17
M6	76	31.6	220	6.5	13	15	12	17
M6	76	31.6	240	6.5	13	15	12	17
M6	90	32	105	6.5	13	15	12	17
M6	90	32	120	6.5	13	15	12	17
M6	90	32	146	6.5	13	15	12	17
M6	90	32	175	6.5	13	15	12	17
M6	90	32	220	6.5	13	15	12	17
M6	90	32	240	6.5	13	15	12	17
M6	100	32	105	6.5	13	15	12	17
M6	100	32	120	6.5	13	15	12	17
M6	100	32	146	6.5	13	15	12	17
M6	100	32	175	6.5	13	15	12	17
M6	100	32	220	6.5	13	15	12	17
M6	100	32	240	6.5	13	15	12	17
M6	120	41.50	105	6.5	13	15	12	17
M6	120	41.50	120	6.5	13	15	12	17
M6	120	41.50	146	6.5	13	15	12	17
M6	120	41.50	175	6.5	13	15	12	17
M6	120	41.50	220	6.5	13	15	12	17
M6	120	41.50	240	6.5	13	15	12	17

PG - LL9 Long Life Grade -40°C +85°C

Terminal Style And Dimension

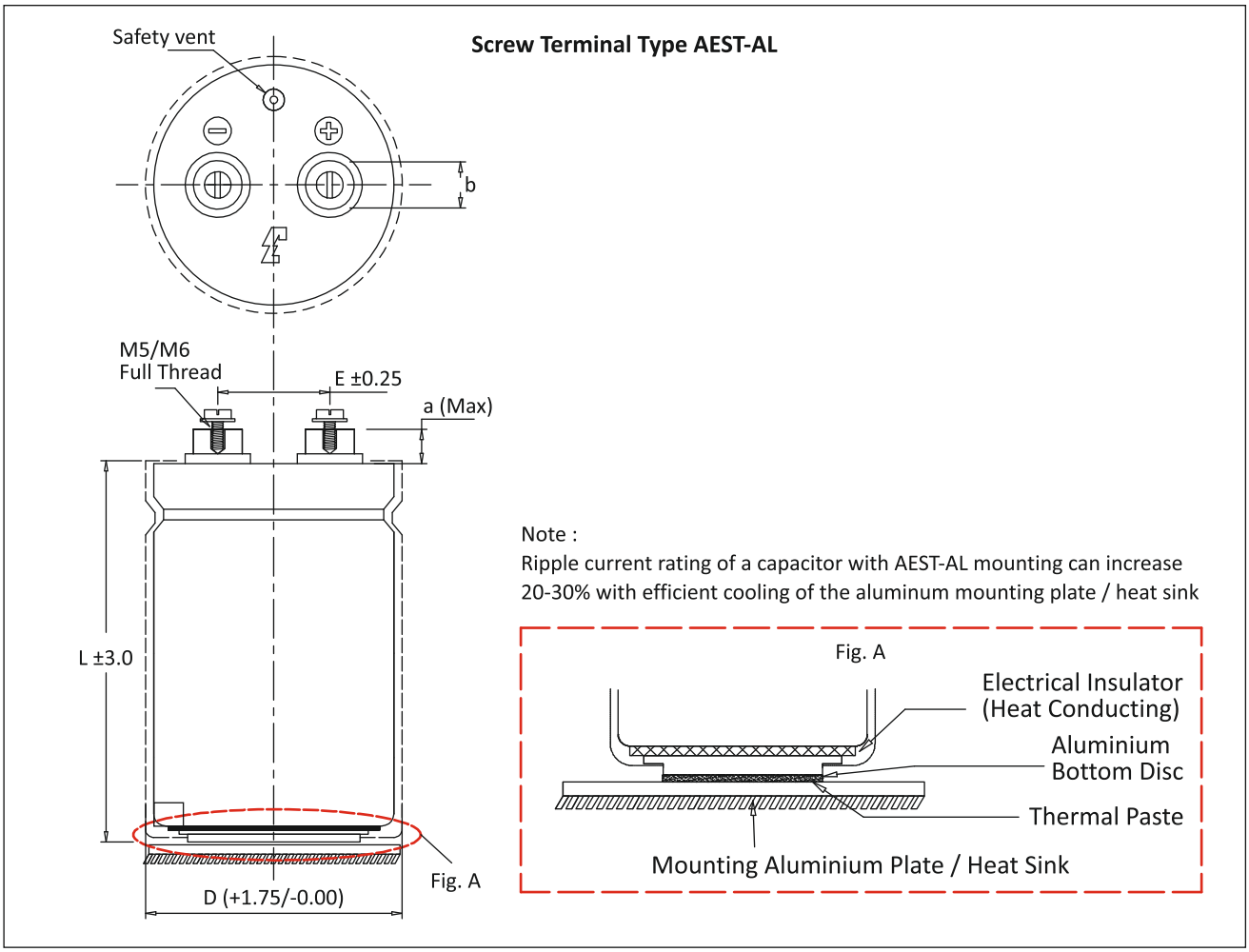

Dimension in mm.

Terminal	D	E	L	a (Max)	b±0.1
M5	63	28.5	105	7.8	12
M5	63	28.5	120	7.8	12
M5	63	28.5	146	7.8	12
M5	76	31.6	105	7.8	12
M5	76	31.6	120	7.8	12
M5	76	31.6	146	7.8	12
M5	76	31.6	175	7.8	12
M5	76	31.6	220	7.8	12
M5	76	31.6	240	7.8	12
M6	76	31.6	105	5.3 *	16
M6	76	31.6	120	5.3 *	16
M6	76	31.6	146	5.3 *	16
M6	76	31.6	175	5.3 *	16
M6	76	31.6	220	5.3 *	16
M6	76	31.6	240	5.3 *	16
M6	90	32	105	5.3 *	16
M6	90	32	146	5.3 *	16
M6	90	32	175	5.3 *	16
M6	90	32	220	5.3 *	16
M6	90	32	240	5.3 *	16

* Low Post Design

PG - LL9 Long Life Grade -40°C +85°C

Mounting Accessories

- **Insulating Nylon Nut and Washers for Cans with Bottom Stud**

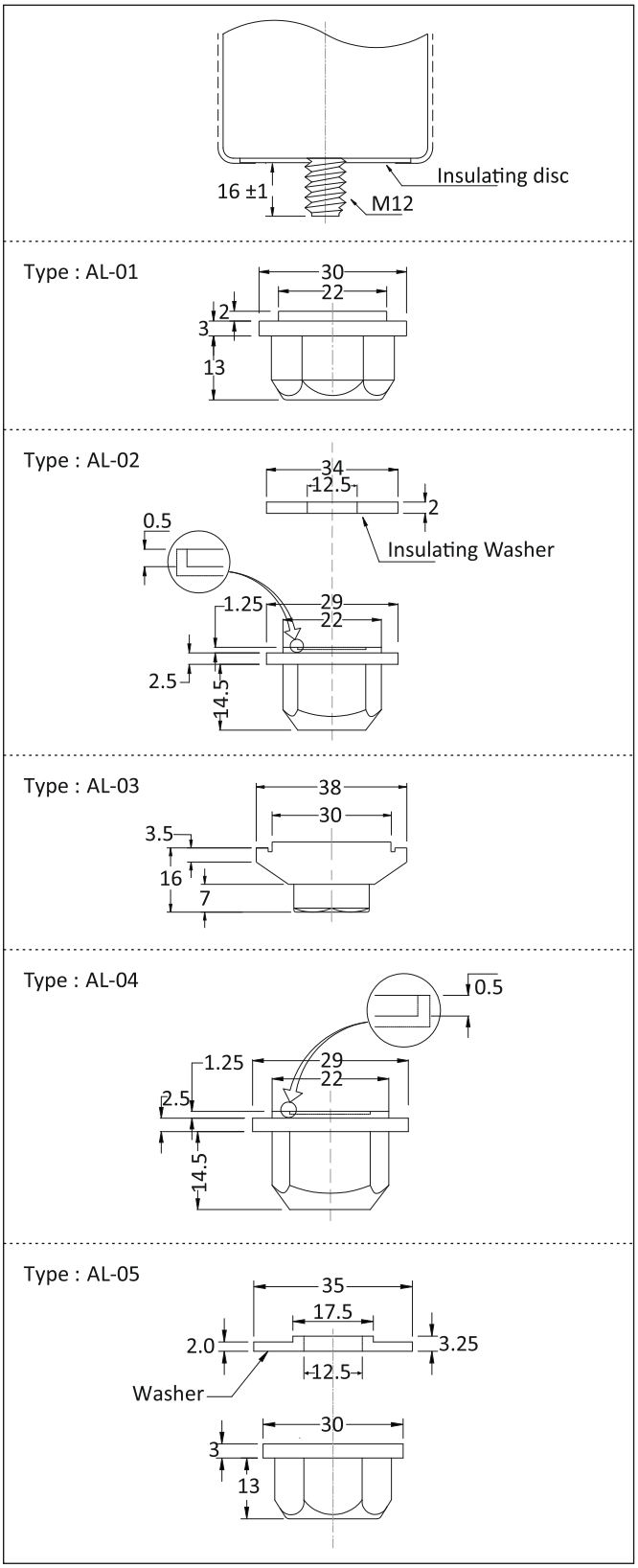

- **Vertical Mounting Clamps**

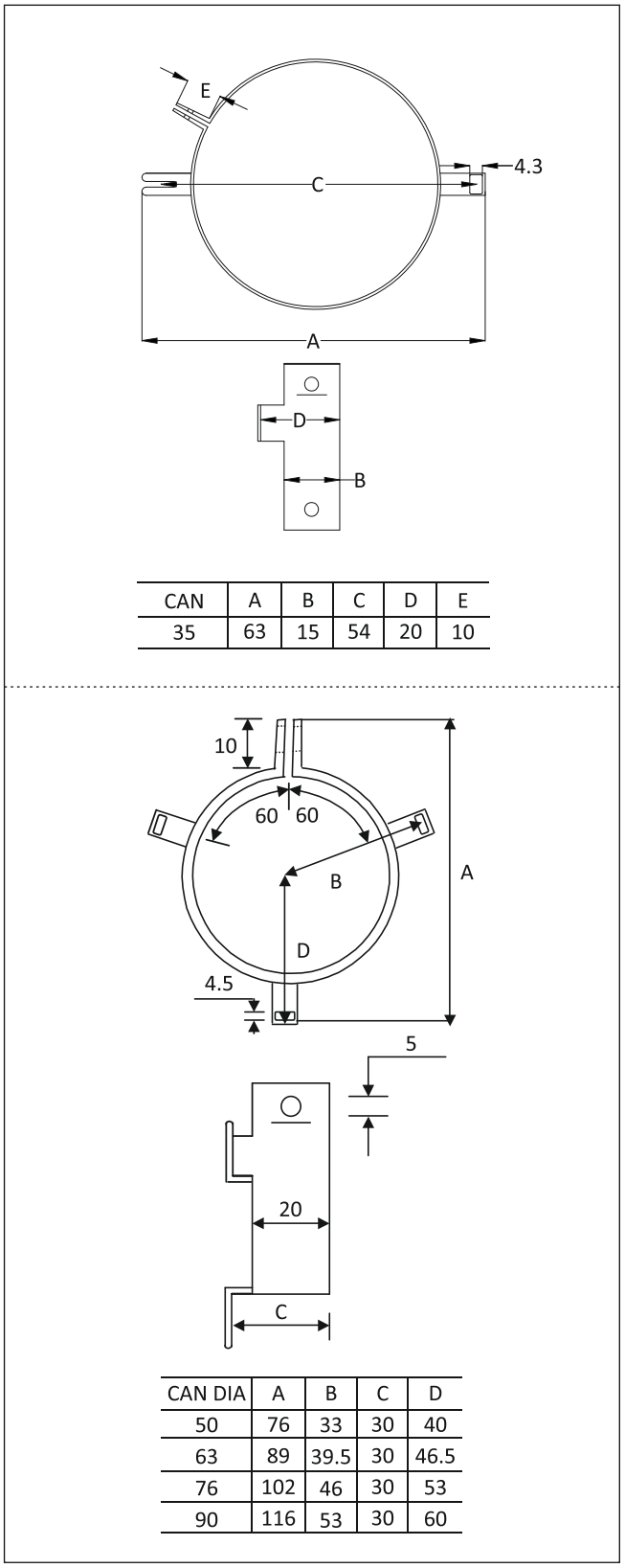

CAN	A	B	C	D	E
35	63	15	54	20	10

CAN DIA	A	B	C	D
50	76	33	30	40
63	89	39.5	30	46.5
76	102	46	30	53
90	116	53	30	60

Dimension in mm.

Catalogue No. AEPL PG-LL9-JULY-2020 (Rev01)

The specification shown herein (page 1 to 9) pertain to the current manufacturing range of the Company. The Company reserves the right to change and /or modify any part of or whole of the specifications as a result of research and development and as may be necessary, without prior notice.

DCL-23

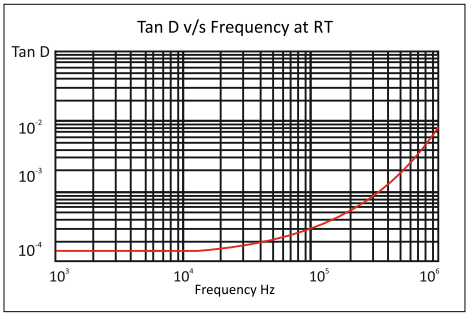

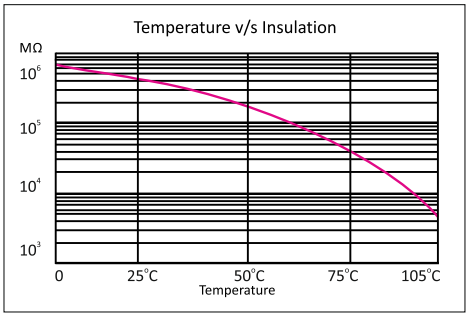

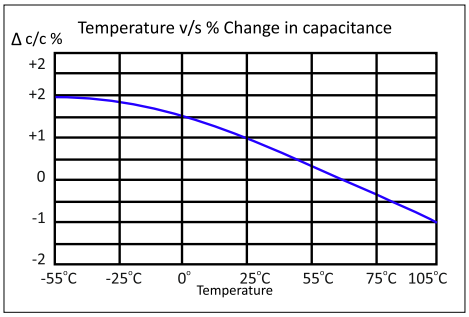

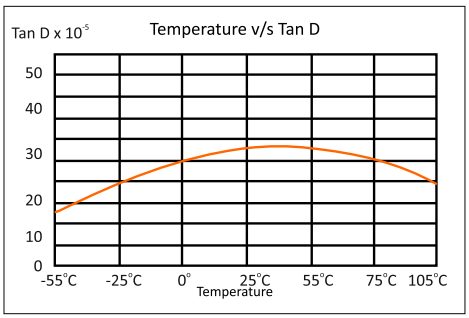

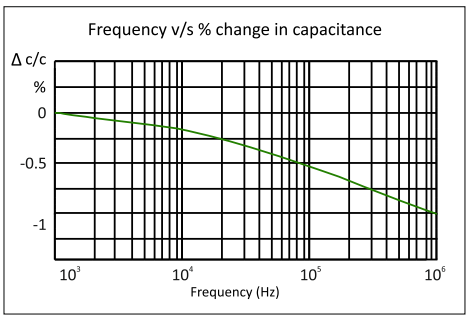

Highlights

- Self-Inductance as low as 11nH
- ESR as low as 0.5 mΩ
- Low profile
- High thermal conductivity
- Life expectancy as high as 100 Khrs
- Integrated mounting flanges
- Flame retardant UL94 - V0, ROHS compliant

Construction

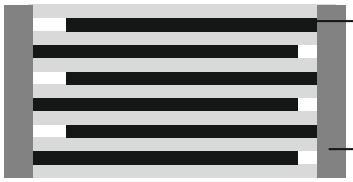

Applications

- DC filtering
- Wind power inverters
- Solar power inverters
- Induction heaters
- Electric vehicle inverters
- Motor drives

DCL-23

Technical Specifications

Physical Characteristics

▪ Electrode material	Metallised polypropylene film
▪ Winding construction	Polypropylene film, metallised polypropylene film
▪ Enclosure	Preformed UL 94-V0 plastic case with thermosetting resin-fill
▪ Terminals	Nickel plated brass

Electrical Characteristics

▪ Capacitance range	12 µF to 265µF
▪ Capacity tolerance	±5%(J), ±10%(K)
▪ Rated voltage VDC	700, 800, 900, 1000, 1200, 1400, 1600, 1800
▪ Test voltage between terminals	1.3 x rated voltage VDC for 60 seconds (not to be repeated)
▪ Test voltage terminal to case	3KVAC at 50Hz for 60 seconds
▪ Dissipation factor (Tan d)	≤0.0015 at 100Hz and 25°C
▪ Temperature range	-40°C to +105°C
▪ Insulation resistance MΩ x µF	≥5,000 S at 25°C (S = MΩ x µF)
▪ Reference Standard	IEC 61071 and IEC 60068

Marking on Capacitors

Each capacitor will have the following information printed on it, sequentially:

- The Company's symbol followed by the words ALCON
- The capacitor grade viz DCL-23
- The capacitance value MFD
- The rated voltage VDC
- The max current Arms
- Capacity tolerance and manufacturing code
- Part number on non-standard capacitors

DCL-23

Standard Capacitors Values

Rated voltage VDC	Nominal Capacitance MFD at 1 Khz	Case size ϕ x Lmm	Case Code	Typical ESR mΩ at Fr* Khz	Fr** Khz	Rise in core temperature per watt dissipated℃	Ripple current rating Irms at 10 Khz to 100Khz					Ordering Code
							25°C	45°C	65°C	85°C	105°C	
700	85	85 x 40	Y1	0.65	156	14.2	91	79	66	46	11	SD000850700AQ0Y1_ _ _ _K01
	100	85 x 51	Y2	0.75	105	12.3	96	83	69	49	12	SD001000700AQ0Y2_ _ _ _K01
	142	85 x 51	Y2	0.75	105	12.3	96	83	69	49	12	SD001420700AQ0Y2_ _ _ _K01
	205	85 x 64	Y3	0.95	71	10.8	87	75	63	44	10	SD002050700AQ0Y3_ _ _ _K01
	265	85 x 79	Y4	1.65	61	8.9	77	67	55	39	9	SD002650700AQ0Y4_ _ _ _K01
800	70	85 x 40	Y1	0.56	168	14.2	86	74	61	42	9	SD000700800AQ0Y1_ _ _ _K01
	88	85 x 40	Y1	0.65	156	14.2	91	79	66	46	11	SD000880800AQ0Y1_ _ _ _K01
	140	85 x 51	Y2	0.75	105	12.3	96	83	69	49	12	SD001400800AQ0Y2_ _ _ _K01
	200	85 x 64	Y3	0.95	71	10.8	87	75	63	44	10	SD002000800AQ0Y3_ _ _ _K01
	260	85 x 79	Y4	1.65	61	8.9	77	67	55	39	9	SD002600800AQ0Y4_ _ _ _K01
900	65	85 x 40	Y1	0.50	68	14.2	84	92	59	40	8	SD000650900AQ0Y1_ _ _ _K01
	100	85 x 51	Y2	0.78	98	12.3	93	81	71	51	12	SD001000900AQ0Y2_ _ _ _K01
	150	85 x 64	Y3	0.97	73	10.8	85	76	64	45	13	SD001500900AQ0Y3_ _ _ _K01
	200	85 x 79	Y4	1.70	69	8.9	75	65	53	37	8	SD002000900AQ0Y4_ _ _ _K01
1000	47	85 x 40	Y1	0.80	176	14.2	85	73	62	38	10	SD000471000AQ0Y1_ _ _ _K01
	52	85 x 40	Y1	1.00	182	14.2	87	75	63	44	10	SD000521000AQ0Y1_ _ _ _K01
	88	85 x 51	Y2	0.80	136	12.3	89	77	64	45	11	SD000881000AQ0Y2_ _ _ _K01
	120	85 x 64	Y3	1.18	91	10.8	78	68	56	40	9	SD001201000AQ0Y3_ _ _ _K01
	170	85 x 79	Y4	2.21	75	8.9	69	60	50	35	8	SD001701000AQ0Y4_ _ _ _K01
1200	38	85 x 40	Y1	1.05	254	14.2	72	62	52	37	9	SD000381200AQ0Y1_ _ _ _K01
	63	85 x 51	Y2	1.19	179	12.3	74	64	53	38	9	SD000631200AQ0Y2_ _ _ _K01
	88	85 x 64	Y3	1.46	116	10.8	69	60	50	35	8	SD000881200AQ0Y3_ _ _ _K01
	118	85 x 79	Y4	2.80	96	8.9	57	49	41	29	7	SD001181200AQ0Y4_ _ _ _K01
1400	20	85 x 40	Y1	1.28	294	14.2	63	55	45	32	8	SD000201400AQ0Y1_ _ _ _K01
	34	85 x 51	Y2	1.47	218	12.3	64	55	46	33	8	SD000341400AQ0Y2_ _ _ _K01
	48	85 x 64	Y3	1.87	143	10.8	61	53	44	31	7	SD000481400AQ0Y3_ _ _ _K01
	64	85 x 79	Y4	3.81	124	8.9	52	45	37	27	6	SD000641400AQ0Y4_ _ _ _K01
1600	18	85 x 40	Y1	1.48	352	14.2	62	54	45	32	7	SD000181600AQ0Y1_ _ _ _K01
	30	85 x 51	Y2	1.71	260	12.3	62	54	45	32	7	SD000301600AQ0Y2_ _ _ _K01
	42	85 x 64	Y3	2.18	171	10.8	59	51	42	30	7	SD000421600AQ0Y3_ _ _ _K01
	55	85 x 79	Y4	4.56	151	8.9	48	42	35	24	6	SD000551600AQ0Y4_ _ _ _K01
1800	12	85 x 40	Y1	1.69	460	14.2	57	49	41	29	7	SD000121800AQ0Y1_ _ _ _K01
	21	85 x 51	Y2	1.86	336	12.3	58	50	42	30	7	SD000211800AQ0Y2_ _ _ _K01
	30	85 x 64	Y3	2.81	226	10.8	50	43	36	26	6	SD000301800AQ0Y3_ _ _ _K01
	40	85 x 79	Y4	5.63	185	8.9	43	37	31	22	5	SD000401800AQ0Y4_ _ _ _K01

Custom designed capacitors are available on request
** Fr =Typical resonant frequency (Tol.±30%)

DCL-23

Capacitor Drawing and Terminal Styles

Terminal Style : MS

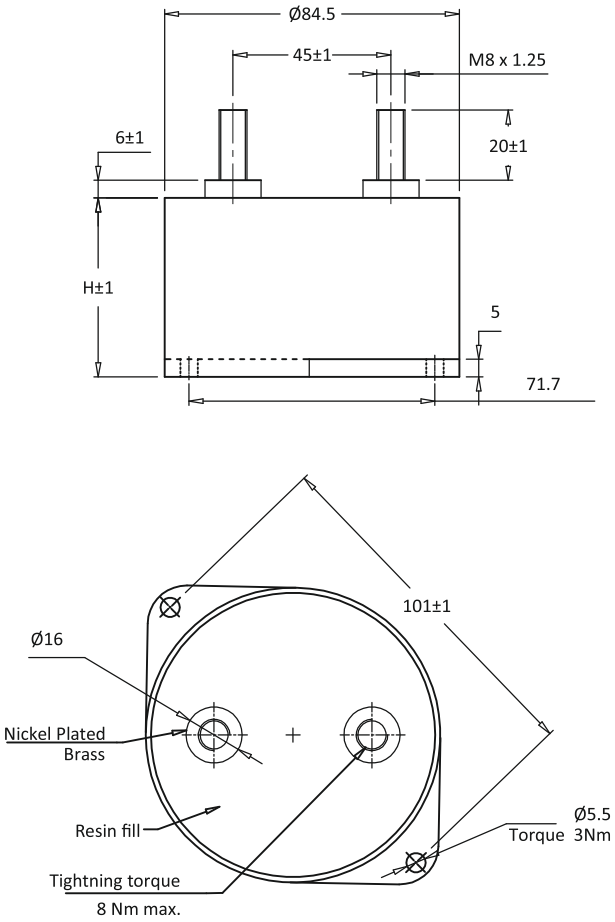

Dimensions in mm

Terminal Style : FS

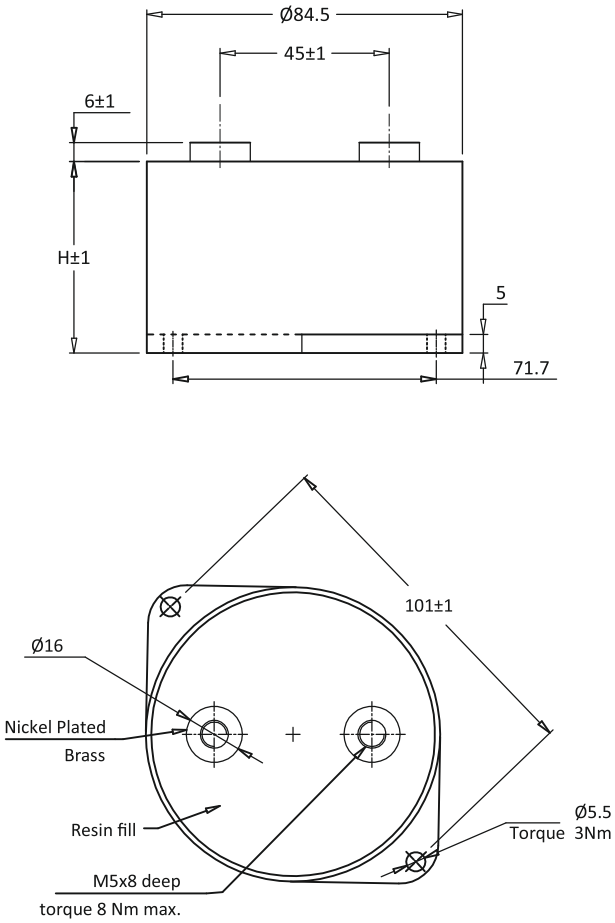

Dimensions in mm

DCL-23

Life Expectancy

Steps to calculate Hotspot Temperature

Can size D x H	Rth °C/Watt
85 x 40	14.2°C
85 x 51	12.3°C
85 x 64	10.8°C
85 x 79	8.9°C

1 Locate the capacitor and the ESR from the electrical specifications
2 Dissipated heat = ($Irms^2$ x ESR)
3 Get the value from table 1 for Rth (°C/watt)
4 Calculate internal temperature rise = ($Irms^2$ x ESR) x Rth (°C/watt)
5 Hotspot temperature of capacitor = T Ambient + ($Irms^2$ x ESR) x Rth (°C/watt)
6 From the graph given below expected life can be obtained
7 Ensure that the voltage and current specification are not exceeded

Example: If 88 MFD/800 VDC is being used at 40 Arms in a 40°C Ambient; then ESR from the table (on page 4) = 0.00065Ω and the case size is Ø85 x 40mm
The dissipated wattage = 40 x 40 x 0.00065Ω = 1.04 watts
Temperature rise = 1.04 x 14.2°C/Watt = 14.76C
The hotspot core temperature inside the capacitor = 40°C (Ambient) + 14.76 (Rise) = **54.76 say 55°C**
From the graph below: If the capacitor is being used at 75% of Vrdc then the expected life will be approx 480,000 hours

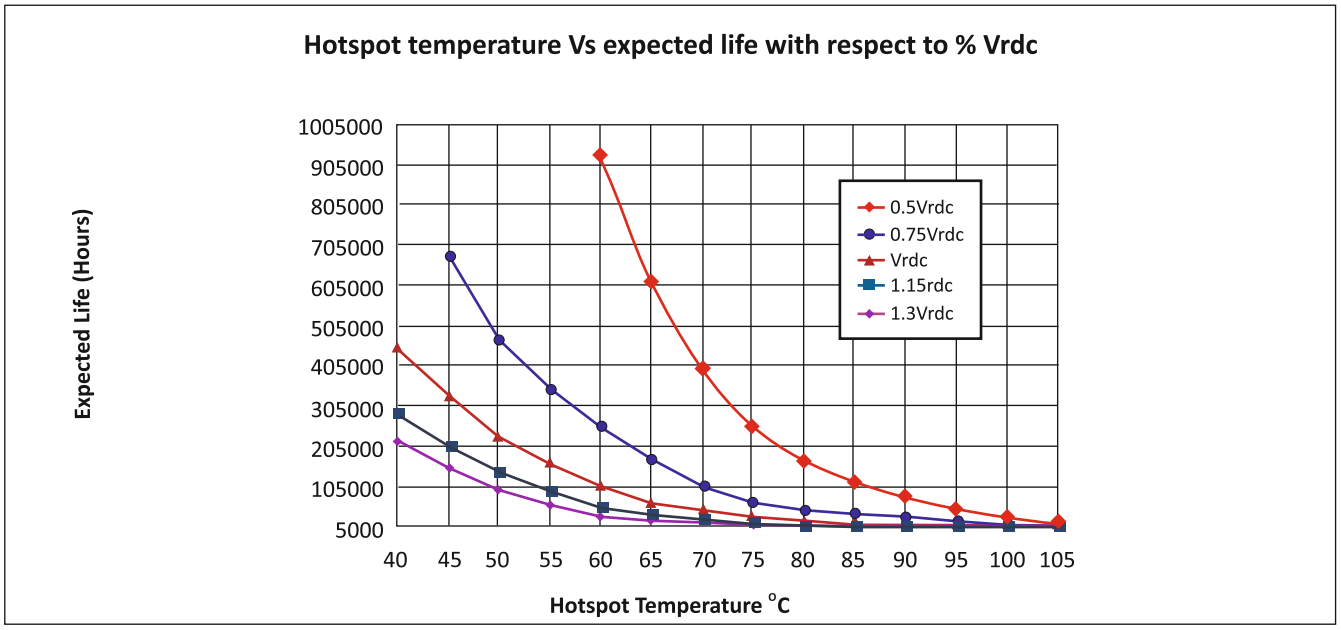

Catalogue No. AEPL DCL-23-FEBRUARY - 2020
The specification shown herein (page 1 to 5) pertain to the current manufacturing range of the Company. The Company reserves the right to change and /or modify any part of or whole of the specifications as a result of research and development and as may be necessary, without prior notice.
All Products not for marketing / sale in all countries.

DCL- 41

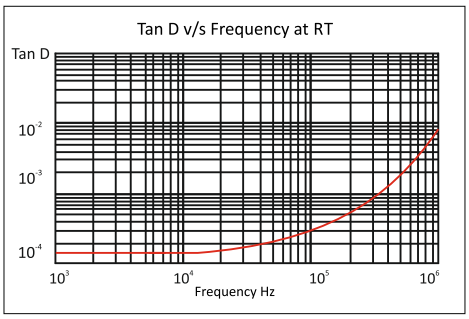

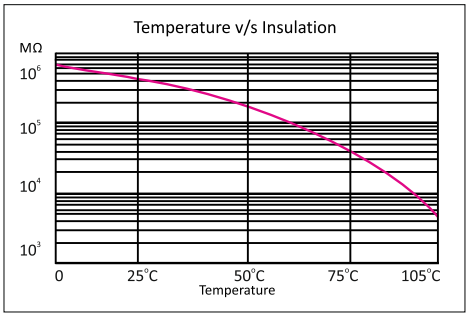

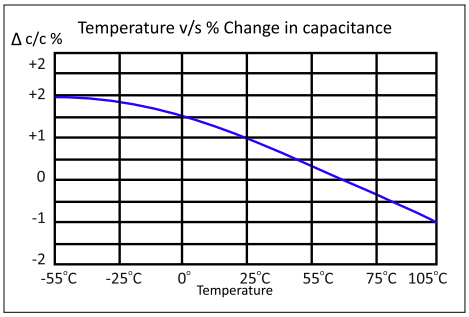

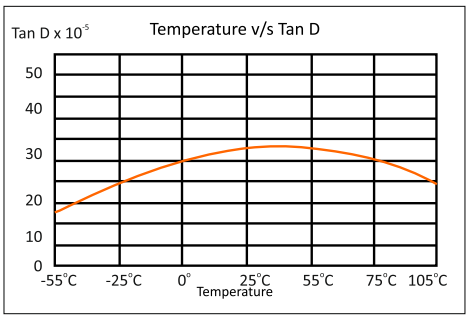

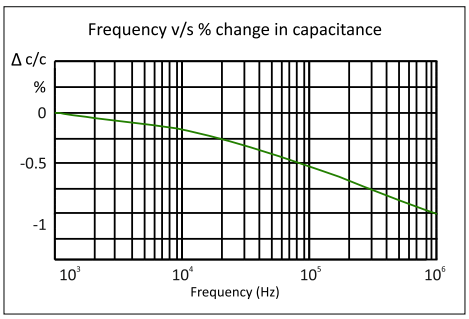

Highlights

- High RMS current
- Low ESR
- Life Expectancy 100,000 Hours
- Fully encapsulated dry construction
- Flame retardant UL94 - V0, ROHS compliant
- Reference Standard: IEC 61071 and IEC 60068

Construction

Applications

DC Link and DC Filter applications in Power converters for

- Uninterruptible power supplies
- Wind power inverters
- Solar power inverters
- Traction and industrial drives.
- Impulse discharge capacitors for magnetising and welding.

DCL- 41

Technical Specifications

Physical Characteristics

▪ Dielectric material	Polypropylene film
▪ Electrode material	Metallised polypropylene film
▪ Winding construction	Polypropylene film, metallised polypropylene film
▪ Enclosure	Aluminum can with preformed UL 94-V0 plastic top with thermosetting resin-fill
▪ Terminals	Nickel plated brass

Electrical Characteristics

▪ Capacitance range	50 µF to 2350µF
▪ Rated Voltage	700vdc to 2400vdc
▪ Capacitance Tolerance	±10%,±5%
▪ Dissipation factor (Tan d)	0.0002
▪ Insulation Resistance MΩ x µF	5,000S @ 25°C (S = MΩ x µF)
▪ Dielectric strength between terminals (U_{T-T})	1.5 x rated voltage for 60 secs
▪ Test Voltage Terminal to case (U_{T-c})	Upto 4800 Vac 50 Hz
▪ Operating Temperature (Θ min to Θ max)	-40°C to +85°C
▪ Maximum Hotspot Temperature	Ø 85 = +85°C Ø 100, = +80°C Ø 116, = +80°C

Marking on Capacitors

Each capacitor will have the following information printed on it, sequentially:

- The Company's symbol followed by the words ALCON
- The capacitor grade viz DCL-41
- The capacitance value MFD
- The rated voltage VDC
- Capacity tolerance and manufacturing code
- Part number on non-standard capacitors

DCL- 41

Capacitor Drawing and Terminal Styles

FD

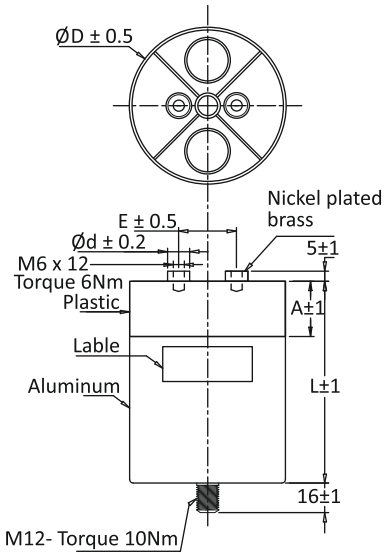

Dimensions in mm

MD

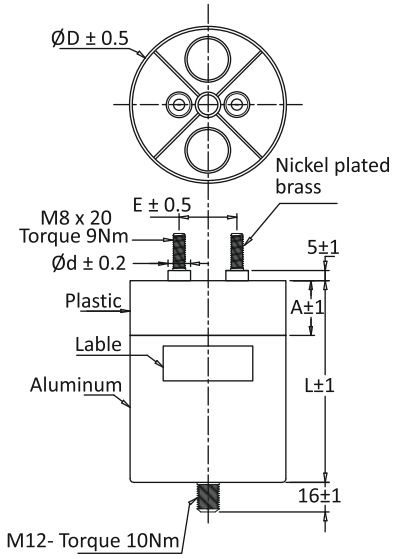

Dimensions in mm

FS

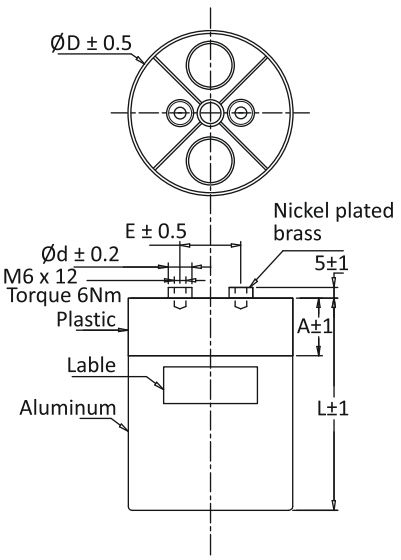

Dimensions in mm

MS

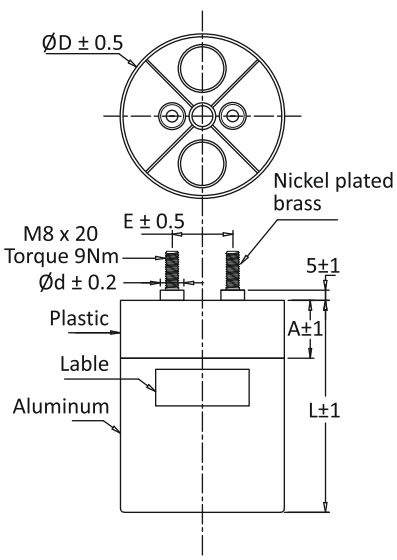

Dimensions in mm

ØD	Ød	E	A
85	12	32	30
100	14	50	30
116	14	50	45

DCL- 41

Standard Capacitor Values

U_N=700vdc ,U_s =1050V , U_R =200V , U_{T-T} =1050Vdc , U_{T-C}=2200Vac for 2 s

C_N	Can size mm		Case Code	Pitch	** Typical ESR @ 1 KHz	R_{TH}	I_{MAX}	I_P	I_S	L_S	Weight	Ordering code*
(µF)	D	L		E mm	mΩ	(°C/W)	(A)	(kA)	(kA)	(nH)	(Kg)	
360	85	105	S1	32	1.6	5.6	40	2.80	8.4	40	0.65	SD003600700AR0S1_ _ _ _K01
450	85	125	S2	32	2.0	4.8	40	3.50	10.5	40	0.75	SD004500700AR0S2_ _ _ _K01
495	85	140	S3	32	2.1	4.5	40	3.90	11.6	40	0.71	SD004950700AR0S3_ _ _ _K01
520	100	105	X1	50	2.0	4.7	40	4.00	12.1	40	0.84	SD005200700AR0X1_ _ _ _K01
540	85	150	S4	32	1.0	4.1	60	4.20	12.6	40	0.90	SD005400700AR0S4_ _ _ _K01
630	85	160	S5	32	1.1	3.8	60	4.90	14.7	40	0.96	SD006300700AR0S5_ _ _ _K01
675	100	125	X2	50	2.4	3.9	40	5.30	15.8	40	1.00	SD006750700AR0X2_ _ _ _K01
675	116	105	R1	50	1.0	4.2	60	5.30	15.8	40	1.10	SD006750700AR0R1_ _ _ _K01
790	100	140	X3	50	1.2	3.5	60	6.10	18.4	40	1.20	SD007900700AR0X3_ _ _ _K01
855	100	150	X4	50	1.2	3.4	60	6.70	20.0	40	1.30	SD008550700AR0X4_ _ _ _K01
900	116	125	R2	50	1.2	3.5	60	7.00	21.0	40	1.40	SD009000700AR0R2_ _ _ _K01
900	85	225	S7	32	1.5	2.7	60	3.50	10.5	60	1.10	SD009000700AR0S7_ _ _ _K01
990	85	255	S8	32	1.0	2.4	80	3.50	10.5	60	1.20	SD009900700AR0S8_ _ _ _K01
1035	100	185	X6	50	1.6	2.5	60	4.10	12.3	40	1.40	SD010350700AR0X6_ _ _ _K01
1080	116	140	R3	50	1.3	3.2	60	8.40	25.2	40	1.64	SD010800700AR0R3_ _ _ _K01
1080	85	275	S9	32	1.9	2.2	60	4.20	12.6	70	1.50	SD010800700AR0S9_ _ _ _K01
1170	116	150	R4	50	1.0	3.1	70	9.10	27.3	50	1.60	SD011700700AR0R4_ _ _ _K01
1260	85	295	S10	32	1.9	1.9	60	4.90	14.7	70	1.90	SD012600700ARS10_ _ _ _K01
1260	116	185	R6	50	1.0	2.4	80	4.90	14.7	60	2.10	SD012600700AR0R6_ _ _ _K01
1350	100	225	X7	50	1.9	2.2	60	5.50	16.5	70	2.20	SD013500700AR0X7_ _ _ _K01
1575	100	255	X8	50	1.1	2.2	80	6.00	18.0	70	2.50	SD015750700AR0X8_ _ _ _K01
1700	100	275	X9	50	1.2	1.9	80	6.50	19.5	70	2.80	SD017000700AR0X9_ _ _ _K01
1800	116	225	R7	50	1.0	1.8	90	7.00	21.0	60	2.60	SD018000700AR0R7_ _ _ _K01
2150	116	255	R8	50	1.0	1.5	100	8.50	25.5	60	2.80	SD021500700AR0R8_ _ _ _K01
2350	116	275	R9	50	1.2	1.3	100	9.00	27.0	70	3.10	SD023500700AR0R9_ _ _ _K01

DCL- 41

Standard Capacitor Values

U_N=900vdc ,U_S =1350V , U_R =200V , U_{T-T} =1350Vdc , U_{T-C}=2500Vac/2 s

C_N	Can size mm		Case Code	Pitch	** Typical ESR @ 1 KHz	R_{TH}	I_{MAX}	I_P	I_S	L_S	Weight	Ordering code*
(µF)	D	L		E mm	mΩ	(°C/W)	(A)	(kA)	(kA)	(nH)	(Kg)	
300	85	105	S1	32	1.7	5.6	40	2.81	8.4	40	0.65	SD003000900AR0S1_ _ _ _K01
360	85	125	S2	32	2.0	4.8	40	3.40	10.0	40	0.75	SD003600900AR0S2_ _ _ _K01
430	100	105	X1	50	2.0	4.7	40	4.04	12.0	40	0.84	SD004300900AR0X1_ _ _ _K01
430	85	140	S3	32	2.1	4.5	40	4.08	12.0	40	0.71	SD004300900AR0S3_ _ _ _K01
475	85	150	S4	32	1.0	4.1	60	4.46	13.0	40	0.90	SD004750900AR0S4_ _ _ _K01
495	85	160	S5	32	1.1	3.8	60	4.68	14.0	60	0.96	SD004950900AR0S5_ _ _ _K01
540	100	125	X2	50	1.9	3.9	40	5.10	15.0	40	1.00	SD005400900AR0X2_ _ _ _K01
540	116	105	R1	50	1.0	4.2	60	5.10	15.0	40	1.10	SD005400900AR0R1_ _ _ _K01
630	100	140	X3	50	1.2	3.5	60	5.95	18.0	50	1.20	SD006300900AR0X3_ _ _ _K01
700	100	150	X4	50	1.2	3.4	60	6.59	20.0	50	1.30	SD007000900AR0X4_ _ _ _K01
720	116	125	R2	50	1.3	3.3	60	6.80	20.0	40	1.40	SD007200900AR0R2_ _ _ _K01
720	85	225	S7	32	1.5	2.7	60	3.40	10.0	60	1.10	SD007200900AR0S7_ _ _ _K01
855	85	255	S8	32	1.0	2.4	80	4.04	12.0	60	1.20	SD008550900AR0S8_ _ _ _K01
855	100	185	X6	50	1.7	2.5	60	4.04	12.0	50	1.40	SD008550900AR0X6_ _ _ _K01
855	116	140	R3	50	1.3	3.2	60	8.08	24.0	40	1.65	SD008550900AR0R3_ _ _ _K01
920	85	275	S9	32	1.9	2.2	60	4.34	13.0	70	1.50	SD009200900AR0S9_ _ _ _K01
945	116	150	R4	50	1.3	3.1	60	8.93	27.0	50	1.60	SD009450900AR0R4_ _ _ _K01
990	85	295	S10	32	2.2	1.9	60	4.68	14.0	70	1.90	SD009900900ARS10_ _ _ _K01
1080	100	225	X7	50	1.1	2.2	80	5.10	15.0	60	2.20	SD010800900AR0X7_ _ _ _K01
1080	116	185	R6	50	1.7	2.4	60	5.10	15.0	60	2.10	SD010800900AR0R6_ _ _ _K01
1260	100	255	X8	50	1.2	2.0	80	5.95	18.0	60	2.50	SD012600900AR0X8_ _ _ _K01
1395	100	255	X8	50	1.2	2.0	80	6.59	20.0	60	2.70	SD013950900AR0X8_ _ _ _K01
1395	100	275	X9	50	1.2	1.9	80	6.59	20.0	60	2.80	SD013950900AR0X9_ _ _ _K01
1440	116	225	R7	50	1.2	2.0	80	6.80	20.0	60	2.60	SD014400900AR0R7_ _ _ _K01
1700	116	255	R8	50	1.0	1.5	100	8.08	24.0	70	2.80	SD017000900AR0R8_ _ _ _K01
1850	116	275	R9	50	1.2	1.3	100	8.71	26.0	70	3.10	SD018500900AR0R9_ _ _ _K01

DCL- 41

Standard Capacitor Values

U_N=1000vdc ,U_S =1500V , U_R =200V , U_{T-T} =1500Vdc , U_{T-C}=2700Vac/2 s

C_N	Can size mm		Case Code	Pitch	** Typical ESR @ 1 KHz	R_{TH}	I_{MAX}	I_P	I_S	L_S	Weight	Ordering code*
(µF)	D	L		E mm	mΩ	(°C/W)	(A)	(kA)	(kA)	(nH)	(Kg)	
225	85	105	S1	32	1.7	5.6	40	2.50	7.5	40	0.65	SD002251000AR0S1_ _ _ _K01
300	85	125	S2	32	2.0	4.8	40	3.30	9.9	40	0.75	SD003001000AR0S2_ _ _ _K01
335	100	105	X1	50	2.0	4.7	40	3.75	11.0	40	0.84	SD003351000AR0X1_ _ _ _K01
350	85	140	S3	32	2.1	4.5	40	3.90	12.0	40	0.71	SD003501000AR0S3_ _ _ _K01
375	85	150	S4	32	1.0	4.1	60	4.20	13.0	40	0.90	SD003751000AR0S4_ _ _ _K01
400	85	160	S5	32	1.1	3.8	60	4.50	14.0	60	0.96	SD004001000AR0S5_ _ _ _K01
425	100	125	X2	50	2.4	3.9	40	4.75	14.0	40	1.00	SD004251000AR0X2_ _ _ _K01
450	116	105	R1	50	1.0	4.2	60	5.00	15.0	40	1.10	SD004501000AR0R1_ _ _ _K01
500	100	140	X3	50	1.2	3.5	60	5.60	17.0	50	1.20	SD005001000AR0X3_ _ _ _K01
560	100	150	X4	50	1.2	3.4	60	6.25	19.0	50	1.30	SD005601000AR0X4_ _ _ _K01
585	116	125	R2	50	1.2	3.5	60	6.50	20.0	40	1.40	SD005851000AR0R2_ _ _ _K01
595	85	225	S7	32	1.5	2.7	60	3.30	9.90	60	1.10	SD005951000AR0S7_ _ _ _K01
675	85	255	S8	32	1.0	2.4	80	3.75	11.0	60	1.20	SD006751000AR0S8_ _ _ _K01
675	100	185	X6	50	1.7	2.5	60	3.75	11.0	50	1.40	SD006751000AR0X6_ _ _ _K01
700	116	140	R3	50	1.3	3.2	60	7.80	23.0	40	1.65	SD007001000AR0R3_ _ _ _K01
735	85	275	S9	32	1.9	2.2	60	4.10	12.0	70	1.50	SD007351000AR0S9_ _ _ _K01
765	116	150	R4	50	1.3	3.1	60	8.50	26.0	50	1.60	SD007651000AR0R4_ _ _ _K01
800	85	295	S10	32	2.2	1.9	60	4.50	14.0	70	1.90	SD008001000ARS10_ _ _ _K01
855	100	225	X7	50	1.1	2.2	80	4.75	14.0	60	2.20	SD008551000AR0X7_ _ _ _K01
900	116	185	R6	50	1.7	2.4	60	5.00	15.0	60	2.10	SD009001000AR0R6_ _ _ _K01
1000	100	255	X8	50	1.2	2.0	80	5.60	17.0	60	2.50	SD010001000AR0X8_ _ _ _K01
1125	100	275	X9	50	1.0	1.9	90	6.25	19.0	60	2.80	SD011251000AR0X9_ _ _ _K01
1170	116	225	R7	50	1.2	2.0	80	6.50	20.0	60	2.60	SD011701000AR0R7_ _ _ _K01
1350	116	255	R8	50	1.0	1.5	100	7.50	23.0	70	2.80	SD013501000AR0R8_ _ _ _K01
1485	116	275	R9	50	1.2	1.3	100	8.25	25.0	70	3.10	SD014851000AR0R9_ _ _ _K01

DCL- 41

Standard Capacitor Values

U_N=1100vdc ,U_S =1650V , U_R =200V , U_{T-T} =1650Vdc , U_{T-C}=2810Vac/2 s

C_N	Can size mm		Case Code	Pitch	** Typical ESR @ 1 KHz	R_{TH}	I_{MAX}	I_P	I_S	L_S	Weight	Ordering code*
(µF)	D	L		E mm	mΩ	(°C/W)	(A)	(kA)	(kA)	(nH)	(Kg)	
190	85	105	S1	32	1.7	5.6	40	2.31	6.9	40	0.65	SD001901100AR0S1_ _ _ _K01
235	85	125	S2	32	2.0	4.8	40	2.86	8.6	40	0.75	SD002351100AR0S2_ _ _ _K01
280	100	105	X1	50	2.0	4.7	40	3.41	10.0	40	0.84	SD002801100AR0X1_ _ _ _K01
295	85	140	S3	32	2.1	4.5	40	3.58	11.0	40	0.71	SD002951100AR0S3_ _ _ _K01
315	85	150	S4	32	1.0	4.1	60	3.85	12.0	40	0.90	SD003151100AR0S4_ _ _ _K01
350	85	160	S5	32	1.1	3.8	60	4.13	12.0	60	0.96	SD003501100AR0S5_ _ _ _K01
350	100	125	X2	50	2.4	3.9	40	4.40	13.0	40	1.00	SD003501100AR0X2_ _ _ _K01
380	116	105	R1	50	1.0	4.2	60	4.62	14.0	40	1.10	SD003801100AR0R1_ _ _ _K01
385	85	185	S6	32	1.3	3.3	60	2.34	7.0	60	1.20	SD003851100AR0S6_ _ _ _K01
420	100	140	X3	50	1.2	3.5	60	5.06	15.0	40	1.30	SD004201100AR0X3_ _ _ _K01
460	100	150	X4	50	1.2	3.4	60	5.61	17.0	40	1.40	SD004601100AR0X4_ _ _ _K01
470	116	125	R2	50	1.2	3.5	60	5.72	17.0	40	1.10	SD004701100AR0R2_ _ _ _K01
560	100	185	X6	50	1.7	2.5	60	3.41	10.0	60	1.20	SD005601100AR0X6_ _ _ _K01
585	116	140	R3	50	1.3	3.2	60	7.15	21.0	60	1.40	SD005851100AR0R3_ _ _ _K01
595	85	225	S7	32	1.7	2.4	60	3.63	11.0	60	1.65	SD005951100AR0S7_ _ _ _K01
630	116	150	R4	50	1.3	3.1	60	7.70	23.0	40	1.50	SD006301100AR0R4_ _ _ _K01
630	85	275	S9	32	1.1	2.2	80	3.85	12.0	70	1.60	SD006301100AR0S9_ _ _ _K01
675	85	295	S10	50	1.2	1.9	80	4.13	12.0	70	1.80	SD006751100ARS10_ _ _ _K01
720	100	225	X7	50	1.1	2.2	80	4.40	13.0	60	2.20	SD007201100AR0X7_ _ _ _K01
765	116	185	R6	50	1.7	2.4	60	4.68	14.0	60	2.10	SD007651100AR0R6_ _ _ _K01
825	100	255	X8	50	1.2	2.0	80	5.06	15.0	70	2.50	SD008251100AR0X8_ _ _ _K01
920	100	275	X9	50	1.2	1.9	80	5.61	17.0	70	2.80	SD009201100AR0X9_ _ _ _K01
950	116	225	R7	32	1.2	2.0	80	5.72	17.0	70	2.60	SD009501100AR0R7_ _ _ _K01
1170	116	255	R8	50	1.0	1.5	100	7.15	21.0	70	2.80	SD011701100AR0R8_ _ _ _K01
1260	116	275	R9	50	1.2	1.3	100	7.70	23.0	70	3.10	SD012601100AR0R9_ _ _ _K01

DCL- 41

Standard Capacitor Values

U_N=1300vdc ,U_S =1950V , U_R =200V , U_{T-T} =1950Vdc , U_{T-C}=3125Vac/2 s

C_N	Can size mm		Case Code	Pitch	** Typical ESR @ 1 KHz	R_{TH}	I_{MAX}	I_P	I_S	L_S	Weight	Ordering code*
(µF)	D	L		E mm	mΩ	(°C/W)	(A)	(kA)	(kA)	(nH)	(Kg)	
160	85	105	S1	32	1.7	5.6	40	2.28	6.8	40	0.65	SD001601300AR0S1_ _ _ _K01
200	85	125	S2	32	2.0	4.8	40	2.86	8.6	40	0.75	SD002001300AR0S2_ _ _ _K01
235	100	105	X1	50	2.0	4.7	40	3.38	10.0	40	0.84	SD002351300AR0X1_ _ _ _K01
250	85	140	S3	32	2.1	4.5	40	3.58	11.0	40	0.71	SD002501300AR0S3_ _ _ _K01
270	85	150	S4	32	1.0	4.1	60	3.90	12.0	40	0.90	SD002701300AR0S4_ _ _ _K01
300	85	160	S5	32	1.1	3.8	60	4.23	13.0	60	0.96	SD003001300AR0S5_ _ _ _K01
300	100	125	X2	50	2.4	3.9	40	4.36	13.0	40	1.00	SD003001300AR0X2_ _ _ _K01
315	116	105	R1	50	1.0	4.2	60	4.55	14.0	40	1.10	SD003151300AR0R1_ _ _ _K01
325	85	185	S6	32	1.3	3.3	60	2.34	7.0	60	0.90	SD003251300AR0S6_ _ _ _K01
350	100	140	X3	50	1.2	3.5	60	5.07	15.0	40	1.20	SD003501300AR0X3_ _ _ _K01
380	100	150	X4	50	1.2	3.4	60	5.53	17.0	40	1.30	SD003801300AR0X4_ _ _ _K01
395	116	125	R2	50	1.2	3.5	60	5.72	17.0	40	1.40	SD003951300AR0R2_ _ _ _K01
395	85	225	S7	32	1.5	2.7	60	2.86	8.6	60	1.10	SD003951300AR0S7_ _ _ _K01
470	100	185	X6	50	1.7	2.5	60	3.38	10.0	60	1.40	SD004701300AR0X6_ _ _ _K01
470	116	140	R3	32	1.3	3.2	60	6.83	20.0	60	1.65	SD004701300AR0R3_ _ _ _K01
495	116	150	R4	50	1.3	3.1	60	7.15	21.0	40	1.60	SD004951300AR0R4_ _ _ _K01
495	85	255	S8	32	1.0	2.4	80	3.58	11.0	70	1.20	SD004951300AR0S8_ _ _ _K01
540	85	275	S9	50	1.1	2.1	80	3.90	12.0	50	1.50	SD005401300AR0S9_ _ _ _K01
585	85	295	S10	32	1.2	1.9	80	4.23	13.0	70	1.90	SD005851300ARS10_ _ _ _K01
600	100	225	X7	50	1.9	2.2	60	4.36	13.0	60	2.20	SD006001300AR0X7_ _ _ _K01
615	116	185	R6	50	1.0	2.4	80	4.45	13.0	60	2.10	SD006151300AR0R6_ _ _ _K01
700	100	255	X8	50	1.2	2.0	80	5.07	15.0	70	2.50	SD007001300AR0X8_ _ _ _K01
765	100	275	X9	50	1.0	1.9	90	5.53	17.0	70	2.80	SD007651300AR0X9_ _ _ _K01
785	116	225	R7	50	1.2	2.0	80	5.69	17.0	60	2.60	SD007851300AR0R7_ _ _ _K01
945	116	255	R8	50	1.0	1.5	100	6.83	20.0	70	2.80	SD009451300AR0R8_ _ _ _K01
1000	116	275	R9	50	1.2	1.3	100	7.15	21.0	70	3.10	SD010001300AR0R9_ _ _ _K01

DCL- 41

Standard Capacitor Values

U_N=1500vdc ,U_S =2250V , U_R =200V , U_{T-T} =2250Vdc , U_{T-C}=3500Vac/2 s

C_N	Can size mm		Case Code	Pitch	** Typical ESR @ 1 KHz	R_{TH}	I_{MAX}	I_P	I_S	L_S	Weight	Ordering code*
(µF)	D	L		E mm	mΩ	(°C/W)	(A)	(kA)	(kA)	(nH)	(Kg)	
85	85	105	S1	32	1.5	5.6	40	1.43	4.3	40	0.65	SD000851500AR0S1_ _ _ _K01
120	85	125	S2	32	2.0	4.8	40	1.95	5.9	40	0.75	SD001201500AR0S2_ _ _ _K01
125	85	140	S3	32	2.1	4.5	40	2.10	6.3	40	0.71	SD001251500AR0S3_ _ _ _K01
130	100	105	X1	50	2.0	4.7	40	2.18	6.5	40	0.84	SD001301500AR0X1_ _ _ _K01
150	85	150	S4	32	1.0	4.1	60	2.40	7.2	40	0.90	SD001501500AR0S4_ _ _ _K01
160	85	160	S5	32	1.1	3.8	60	2.63	7.9	60	0.96	SD001601500AR0S5_ _ _ _K01
170	100	125	X2	50	2.4	3.9	40	2.85	8.6	40	1.00	SD001701500AR0X2_ _ _ _K01
170	116	105	R1	50	1.0	4.2	60	2.85	8.6	40	1.10	SD001701500AR0R1_ _ _ _K01
200	100	140	X3	50	1.2	3.5	60	3.30	9.9	40	1.20	SD002001500AR0X3_ _ _ _K01
220	100	150	X4	50	1.2	3.4	60	3.60	11.0	40	1.30	SD002201500AR0X4_ _ _ _K01
240	116	125	R2	50	1.2	3.5	60	3.90	12.0	40	1.40	SD002401500AR0R2_ _ _ _K01
250	85	225	S7	32	1.5	2.7	60	2.06	6.2	60	1.10	SD002501500AR0S7_ _ _ _K01
250	85	255	S8	32	1.3	3.1	60	2.10	6.3	60	1.53	SD002501500AR0S8_ _ _ _K01
260	100	185	X6	50	1.7	2.5	60	2.18	6.5	60	1.40	SD002601500AR0X6_ _ _ _K01
285	116	150	R4	50	1.3	3.1	60	4.73	14.0	40	1.60	SD002851500AR0R4_ _ _ _K01
290	85	275	S9	32	1.9	2.2	60	2.40	7.2	70	1.50	SD002901500AR0S9_ _ _ _K01
315	85	295	S10	32	1.2	1.9	80	2.63	7.9	70	1.90	SD003151500ARS10_ _ _ _K01
350	100	225	X7	50	1.9	2.2	60	2.85	8.6	70	2.20	SD003501500AR0X7_ _ _ _K01
360	116	185	R6	50	1.0	2.4	80	3.00	9.0	60	2.10	SD003601500AR0R6_ _ _ _K01
400	100	255	X8	50	1.2	2.0	80	3.30	9.9	70	2.50	SD004001500AR0X8_ _ _ _K01
430	100	275	X9	50	1.2	1.9	80	3.60	11.0	70	2.80	SD004301500AR0X9_ _ _ _K01
560	116	255	R8	50	1.0	1.5	100	4.69	14.0	70	2.80	SD005601500AR0R8_ _ _ _K01
630	116	275	R9	50	1.2	1.3	100	5.25	16.0	70	3.10	SD006301500AR0R9_ _ _ _K01

DCL- 41

Standard Capacitor Values

U_N=1800vdc ,U_S =2700V , U_R =200V , U_{T-T} =2700Vdc , U_{T-C}=3900Vac/2 s

C_N	Can size mm		Case Code	Pitch	** Typical ESR @ 1 KHz	R_{TH}	I_{MAX}	I_P	I_S	L_S	Weight	Ordering code*
(µF)	D	L		E mm	mΩ	(°C/W)	(A)	(kA)	(kA)	(nH)	(Kg)	
70	85	105	S1	32	1.7	5.6	40	1.35	4.1	40	0.65	SD000701800AR0S1_ _ _ _K01
90	85	125	S2	32	2.0	4.8	40	1.80	5.4	40	0.75	SD000901800AR0S2_ _ _ _K01
100	85	140	S3	32	2.1	4.5	40	2.07	6.2	40	0.71	SD001001800AR0S3_ _ _ _K01
100	100	105	X1	50	2.0	4.7	40	2.07	6.2	40	0.84	SD001001800AR0X1_ _ _ _K01
110	85	150	S4	32	1.0	4.1	60	2.16	6.5	40	0.90	SD001101800AR0S4_ _ _ _K01
130	85	160	S5	32	1.1	3.8	60	2.52	7.6	60	0.96	SD001301800AR0S5_ _ _ _K01
135	100	125	X2	50	2.4	3.9	40	2.70	8.1	40	1.00	SD001351800AR0X2_ _ _ _K01
135	116	105	R1	50	1.0	4.2	60	2.70	8.1	40	1.10	SD001351800AR0R1_ _ _ _K01
160	100	140	X3	50	1.2	3.5	60	3.15	9.5	40	1.20	SD001601800AR0X3_ _ _ _K01
170	100	150	X4	50	1.2	3.4	60	3.42	10.0	40	1.30	SD001701800AR0X4_ _ _ _K01
180	116	125	R2	50	1.2	3.5	60	3.60	11.0	40	1.40	SD001801800AR0R2_ _ _ _K01
200	85	225	S7	32	1.5	2.7	60	4.05	12.0	60	1.10	SD002001800AR0S7_ _ _ _K01
210	85	255	S8	32	1.0	2.4	80	4.14	12.0	60	1.20	SD002101800AR0S8_ _ _ _K01
210	100	185	X6	50	1.7	2.5	60	4.14	12.0	60	1.40	SD002101800AR0X6_ _ _ _K01
220	116	140	R3	50	1.3	3.2	60	4.32	13.0	40	1.64	SD002201800AR0R3_ _ _ _K01
225	85	275	S9	32	1.9	2.2	60	4.50	14.0	70	1.50	SD002251800AR0S9_ _ _ _K01
250	116	150	R4	50	1.3	3.1	60	4.95	15.0	50	1.60	SD002501800AR0R4_ _ _ _K01
270	85	295	S10	32	2.2	1.9	60	2.70	8.1	70	1.90	SD002701800ARS10_ _ _ _K01
270	100	225	X7	50	1.1	2.2	80	2.70	8.1	60	2.20	SD002701800AR0X7_ _ _ _K01
270	116	185	R6	50	0.6	2.4	100	2.70	8.1	60	2.10	SD002701800AR0R6_ _ _ _K01
315	100	255	X8	50	0.8	2.0	100	3.15	9.5	70	2.50	SD003151800AR0X8_ _ _ _K01
350	100	275	X9	50	0.8	1.9	100	3.42	10.0	70	2.80	SD003501800AR0X9_ _ _ _K01
360	116	255	R8	50	1.0	1.5	100	3.60	11.0	70	2.80	SD003601800AR0R8_ _ _ _K01
430	116	275	R9	50	1.2	1.3	100	4.28	13.0	70	3.10	SD004301800AR0R9_ _ _ _K01

DCL- 41

Standard Capacitor Values

U_N=2000vdc ,U_S =3000V , U_R =200V , U_{T-T} =3000Vdc , U_{T-C}=4210Vac/2 s

C_N	Can size mm		Case Code	Pitch	** Typical ESR @ 1 KHz	R_{TH}	I_{MAX}	I_P	I_S	L_S	Weight	Ordering code*
(µF)	D	L		E mm	mΩ	(°C/W)	(A)	(kA)	(kA)	(nH)	(Kg)	
60	85	105	S1	32	1.5	5.6	40	1.30	3.9	40	0.65	SD000602000AR0S1_ _ _ _K01
70	85	125	S2	32	2.0	4.8	40	1.60	4.8	40	0.75	SD000702000AR0S2_ _ _ _K01
80	85	140	S3	32	2.1	4.5	40	1.80	5.4	40	0.71	SD000802000AR0S3_ _ _ _K01
85	100	105	X1	50	2.0	4.7	40	1.90	5.7	40	0.84	SD000852000AR0X1_ _ _ _K01
90	85	150	S4	32	1.0	4.1	60	2.00	6.0	40	0.90	SD000902000AR0S4_ _ _ _K01
100	85	160	S5	32	1.1	3.8	60	2.20	6.6	60	0.96	SD001002000AR0S5_ _ _ _K01
110	100	125	X2	50	2.4	3.9	40	2.40	7.2	40	1.00	SD001102000AR0X2_ _ _ _K01
115	116	105	R1	50	1.0	4.2	60	2.50	7.5	40	1.10	SD001152000AR0R1_ _ _ _K01
120	85	185	S6	50	1.3	3.3	60	1.30	3.9	60	0.90	SD001202000AR0S6_ _ _ _K01
125	100	140	X3	50	1.2	3.5	60	2.80	8.4	40	1.20	SD001252000AR0X3_ _ _ _K01
135	116	125	R2	32	1.2	3.5	60	3.00	9.0	40	1.40	SD001352000AR0R2_ _ _ _K01
140	100	150	X4	50	1.2	3.4	60	3.10	9.3	60	1.30	SD001402000AR0X4_ _ _ _K01
150	85	225	S7	32	1.5	2.7	60	3.20	9.6	60	1.10	SD001502000AR0S7_ _ _ _K01
155	116	140	R3	32	1.3	3.2	60	3.50	11.0	40	1.65	SD001552000AR0R3_ _ _ _K01
170	100	185	X6	50	1.7	2.5	60	1.90	5.7	60	1.40	SD001702000AR0X6_ _ _ _K01
180	85	275	S9	32	1.9	2.2	60	2.00	6.0	40	1.50	SD001802000AR0S9_ _ _ _K01
180	116	150	R4	50	1.3	3.1	60	4.00	12.0	60	1.60	SD001802000AR0R4_ _ _ _K01
200	85	295	S10	32	2.2	1.9	60	2.25	6.8	70	1.90	SD002002000ARS10_ _ _ _K01
215	100	225	X7	50	1.1	2.2	80	2.40	7.2	70	2.20	SD002152000AR0X7_ _ _ _K01
225	116	185	R6	50	1.0	2.4	80	2.50	7.5	60	2.10	SD002252000AR0R6_ _ _ _K01
250	100	255	X8	50	1.2	2.0	80	2.80	8.4	70	2.50	SD002502000AR0X8_ _ _ _K01
270	116	225	R7	50	1.2	2.0	80	3.00	9.0	70	2.60	SD002702000AR0R7_ _ _ _K01
280	100	275	X9	50	1.2	1.9	80	3.10	9.3	70	2.80	SD002802000AR0X9_ _ _ _K01
315	116	255	R8	50	1.0	1.5	100	3.50	11.0	70	2.80	SD003152000AR0R8_ _ _ _K01
360	116	275	R9	50	1.2	1.3	100	4.00	12.0	70	3.10	SD003602000AR0R9_ _ _ _K01

DCL- 41

Standard Capacitor Values

U_N=2200vdc ,U_S =3300V , U_R =200V , U_{T-T} =3300Vdc , U_{T-C}=4530Vac/2 s

C_N	Can size mm		Case Code	Pitch	** Typical ESR @ 1 KHz	R_{TH}	I_{MAX}	I_P	I_S	L_S	Weight	Ordering code*
(µF)	D	L		E mm	mΩ	(°C/W)	(A)	(kA)	(kA)	(nH)	(Kg)	
45	85	105	S1	32	1.7	5.6	40	1.10	3.3	40	0.65	SD000452200AR0S1_ _ _ _K01
60	85	125	S2	32	2.0	4.8	40	1.43	4.3	40	0.75	SD000602200AR0S2_ _ _ _K01
65	85	140	S3	32	2.1	4.5	40	1.65	5.0	40	0.71	SD000652200AR0S3_ _ _ _K01
65	100	105	X1	50	2.0	4.7	40	1.65	5.0	40	0.84	SD000652200AR0X1_ _ _ _K01
75	85	150	S4	32	1.0	4.1	60	1.87	5.6	40	0.90	SD000752200AR0S4_ _ _ _K01
85	85	160	S5	32	1.1	3.8	60	2.09	6.3	60	0.96	SD000852200AR0S5_ _ _ _K01
90	85	185	S6	50	2.8	3.3	40	2.20	6.6	40	0.90	SD000902200AR0S6_ _ _ _K01
90	116	105	R1	50	1.0	4.2	60	2.20	6.6	40	1.10	SD000902200AR0R1_ _ _ _K01
90	100	125	X2	50	1.1	3.9	60	2.20	6.6	40	1.00	SD000902200AR0X2_ _ _ _K01
105	100	140	X3	50	1.2	3.5	60	2.53	7.6	40	1.20	SD001052200AR0X3_ _ _ _K01
110	100	150	X4	50	1.2	3.4	60	2.75	8.3	40	1.30	SD001102200AR0X4_ _ _ _K01
115	85	225	S7	32	1.5	2.7	60	1.43	4.3	60	1.10	SD001152200AR0S7_ _ _ _K01
115	116	125	R2	50	1.2	3.5	60	2.86	8.6	40	1.40	SD001152200AR0R2_ _ _ _K01
135	85	255	S8	32	1.7	2.4	60	1.65	5.0	60	1.20	SD001352200AR0S8_ _ _ _K01
135	100	185	X6	50	1.7	2.5	60	1.65	5.0	60	1.40	SD001352200AR0X6_ _ _ _K01
135	116	140	R3	50	1.3	3.2	60	3.30	9.9	40	1.65	SD001352200AR0R3_ _ _ _K01
145	85	275	S9	32	1.1	2.2	80	1.76	5.3	70	1.50	SD001452200AR0S9_ _ _ _K01
150	116	150	R4	50	1.3	3.1	60	3.74	11.0	50	1.60	SD001502200AR0R4_ _ _ _K01
170	85	295	S10	32	1.2	1.9	80	2.09	6.3	70	1.90	SD001702200ARS10_ _ _ _K01
180	100	225	X7	50	1.1	2.2	80	2.20	6.6	60	2.20	SD001802200AR0X7_ _ _ _K01
180	116	185	R6	50	1.0	2.4	80	2.20	6.6	60	2.10	SD001802200AR0R6_ _ _ _K01
205	100	255	X8	50	1.2	2.0	80	2.53	7.6	70	2.50	SD002052200AR0X8_ _ _ _K01
225	100	275	X9	50	1.2	1.9	80	2.75	8.3	70	2.80	SD002252200AR0X9_ _ _ _K01
235	116	225	R7	50	1.2	2.0	80	2.86	8.6	60	2.60	SD002352200AR0R7_ _ _ _K01
270	116	255	R8	50	1.0	1.5	100	3.30	9.9	70	2.80	SD002702200AR0R8_ _ _ _K01
280	116	275	R9	50	1.2	1.3	100	3.52	11.0	70	3.10	SD002802200AR0R9_ _ _ _K01

DCL- 41

Standard Capacitor Values

U_N=2400vdc ,U_S =3600V , U_R =200V , U_{T-T} =3600Vdc , U_{T-C}=4840Vac/2 s

C_N	Can size mm		Case Code	Pitch	** Typical ESR @ 1 KHz	R_{TH}	I_{MAX}	I_P	I_S	L_S	Weight	Ordering code*
(µF)	D	L		E mm	mΩ	(°C/W)	(A)	(kA)	(kA)	(nH)	(Kg)	
45	85	105	S1	32	1.7	5.6	40	1.20	3.6	40	0.65	SD000452400AR0S1_ _ _ _K01
55	85	125	S2	32	2.0	4.8	40	1.44	4.3	40	0.75	SD000552400AR0S2_ _ _ _K01
60	100	105	X1	50	2.0	4.7	40	1.56	4.7	40	0.84	SD000602400AR0X1_ _ _ _K01
65	85	140	S3	32	2.1	4.5	40	1.68	5.0	40	0.71	SD000652400AR0S3_ _ _ _K01
70	85	150	S4	32	1.0	4.1	60	1.80	5.4	40	0.90	SD000702400AR0S4_ _ _ _K01
75	85	160	S5	32	1.1	3.8	60	1.92	5.8	60	0.96	SD000752400AR0S5_ _ _ _K01
75	100	125	X2	50	2.4	3.9	40	2.04	6.1	40	1.00	SD000752400AR0X2_ _ _ _K01
80	116	105	R1	50	1.0	4.2	60	2.16	6.5	40	1.10	SD000802400AR0R1_ _ _ _K01
90	100	140	X3	50	1.2	3.5	60	2.40	7.2	40	1.20	SD000902400AR0X3_ _ _ _K01
95	100	150	X4	50	1.2	3.4	60	2.52	7.6	40	1.30	SD000952400AR0X4_ _ _ _K01
100	116	125	R2	50	1.2	3.5	60	2.64	7.9	40	1.40	SD001002400AR0R2_ _ _ _K01
100	85	185	S6	32	1.3	3.3	60	1.32	4.0	60	0.90	SD001002400AR0S6_ _ _ _K01
110	85	225	S7	32	1.5	2.7	60	1.44	4.3	60	1.10	SD001102400AR0S7_ _ _ _K01
120	85	255	S8	32	1.7	2.4	60	1.56	4.7	60	1.20	SD001202400AR0S8_ _ _ _K01
120	100	185	X6	50	1.7	2.5	60	1.56	4.7	60	1.40	SD001202400AR0X6_ _ _ _K01
125	116	140	R3	50	1.3	3.2	60	3.36	10.0	40	1.65	SD001252400AR0R3_ _ _ _K01
125	85	275	S9	32	1.1	2.2	80	1.68	5.0	70	1.50	SD001252400AR0S9_ _ _ _K01
135	116	150	R4	50	1.3	3.1	60	3.60	11.0	50	1.60	SD001352400AR0R4_ _ _ _K01
145	85	295	S10	32	1.2	1.9	80	1.92	5.8	70	1.90	SD001452400ARS10_ _ _ _K01
155	100	225	X7	50	1.1	2.2	80	2.04	6.1	60	2.20	SD001552400AR0X7_ _ _ _K01
155	116	185	R6	50	1.0	2.4	80	2.04	6.1	60	2.10	SD001552400AR0R6_ _ _ _K01
180	100	255	X8	50	1.2	2.0	80	2.40	7.2	70	2.50	SD001802400AR0X8_ _ _ _K01
190	100	275	X9	50	1.2	1.9	80	2.52	7.6	70	2.80	SD001902400AR0X9_ _ _ _K01
200	116	225	R7	50	0.9	2.0	90	2.64	7.9	60	2.60	SD002002400AR0R7_ _ _ _K01
235	116	255	R8	50	1.0	1.5	100	3.12	9.4	70	2.80	SD002352400AR0R8_ _ _ _K01
250	116	275	R9	50	1.2	1.3	100	3.36	10.0	70	3.10	SD002502400AR0R9_ _ _ _K01

**MAX. ESR = 2x typical ESR

DCL- 41

Definitions of parameters

Rated d.c. voltage : U_N
Maximum operating peak voltage of either polarity but of a non- reversing type waveform, for which the capacitor has been designed, for continuous operation

Ripple voltage : U_R
Peak- to- peak alternating component of the unidirectional voltage

Non-recurrent surge voltage : U_S
Peak voltage induced by a switching or any other disturbance of the system which is allowed for a limited number of times and for durations shorter than the basic period

Insulation voltage : U_i
r.m.s. value of the sine wave voltage designed for the insulation between terminals of capacitors to case or earth

Maximum peak current : I_P
Maximum repetitive peak current that can occur during continuous operation

Maximum current : I_{max}
Maximum r.m.s.current for continuous operation

Maximum surge current : I_S
Peak non - repetitive current induced by switching or any other disturbance of the system which is allowed for a limited number of times, for durations shorter than the basic period

Highest operating temperature : Θ_{max}
Temperature of the hottest point on the case of the capacitor when in thermal equilibrium

Lowest operating temperature : Θ_{min}
Lowest temperature of the dielectric at which the capacitor may be energize

Container temperature rise : $\Delta\Theta_{case}$
Difference between the temperature of the hottest point of the container and the temperature of the cooling air

Cooling- air temperature : Θ_{amb}
Temperature of the cooling air measured at the hottest position of the capacitor, under steady state conditions, midway between two units

NOTE : if only one unit is involved, it is the temperature measured at a point approximately 0.1 m away from the capacitor container and at two-thirds of the heights from its base.

Maximum operating temperature : Θ_{max}
Highest temperature of the case at which the capacitor may be operated

Steady-state conditions
Thermal equilibrium attained by the capacitor at constant output and at constant cooling-air temperature

Tangent of the loss angle of a capacitor : $\tan\delta$
Ratio between the equivalent series resistance and the capacitive reactance of a capacitor at a specified sinusoidal alternating voltage, frequency and temperature

$\tan\delta = R_{esr}\ \omega C = \tan_d + R_s\ \omega C$

$\tan_d$= dielectric loss factor (0.0002)

Equivalent series resistance of a capacitor : ESR
Effective resistance which if connected in series with an ideal capacitor of capacitor of capacitance value equal to that of the capacitor in question, would have a power loss equal to active power dissipated in that capacitor under specified operating conditions

Maximum power loss : P_{max}
Maximum power loss at which the capacitor may be operated at the maximum case temperature.

DCL- 41

Life Expectancy

The Life expectancy of DCL-41 metallised polypropylene film capacitor Is very closely linked with the operating temperature and operating voltage of the capacitor.

The life expectancy is related to the capacitors rated voltage and the maximum hotspot temperature(85 °C).

The simultaneous operating of capacitor at highest permissible voltage and operating temperature should be avoided.

Please note there are no frequency or ripple current multiplying factors in case of metallised film DC link capacitors as compared to Aluminum electrolytic capacitors.

The life expectancy can be calculated from the formula and the look up graph given below:

Life Expectancy

Steps to calculate Hotspot Temperature

1. locate the capacitor and the ESR from the Electrical specifications (Data sheet).
2. Heat dissipation =($Irms^2$ x ESR).
3. Get the value for Rth (°C/watt).....Data sheet.
4. Calculate internal temperature rise = ($Irms^2$ x ESR) x Rth (°C/watt).
5. Hotspot temperature of capacitor = T Ambient +($Irms^2$ x ESR) x Rth (°C/watt).

Look at the graph below to get the expected life. Ensure do not exceed the voltage and current specification.

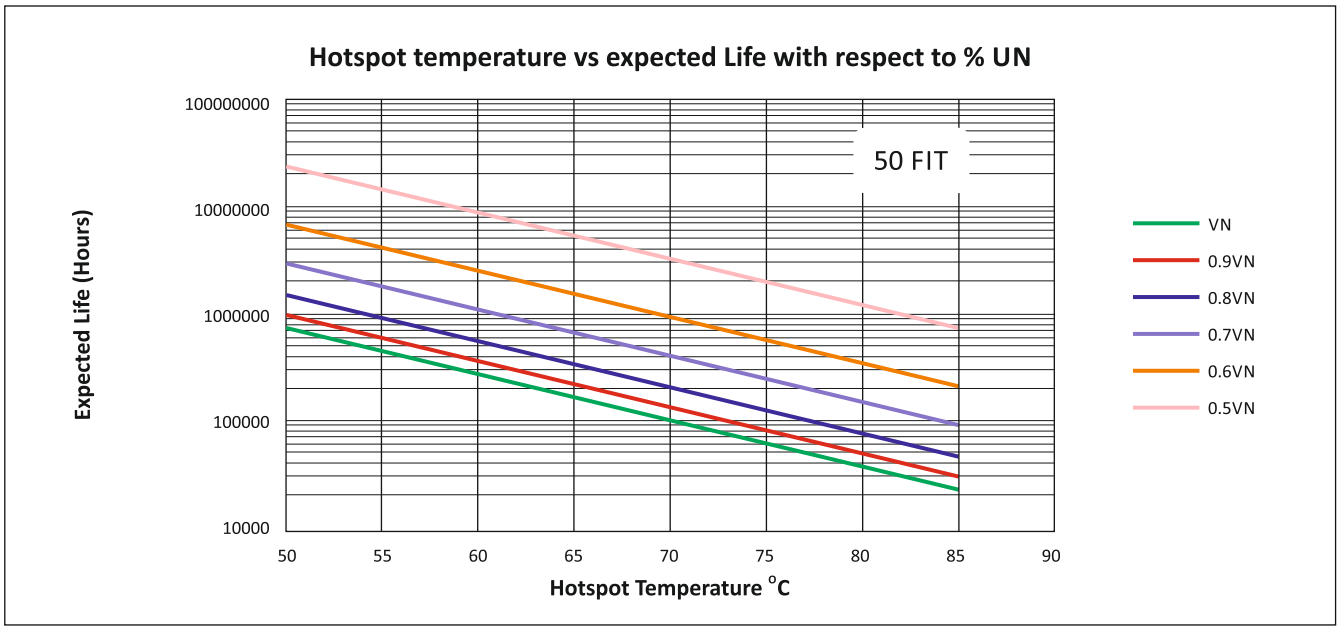

Catalogue No. AEPL DCL-41-JULY-2020 (REV 02)

The specification shown herein (page 1 to 15) pertain to the current manufacturing range of the Company. The Company reserves the right to change and /or modify any part of or whole of the specifications as a result of research and development and as may be necessary, without prior notice.

All Products not for marketing / sale in all countries.

KP-3C

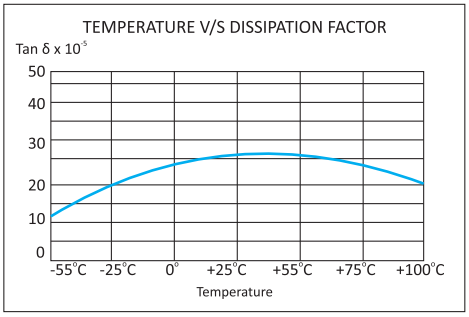

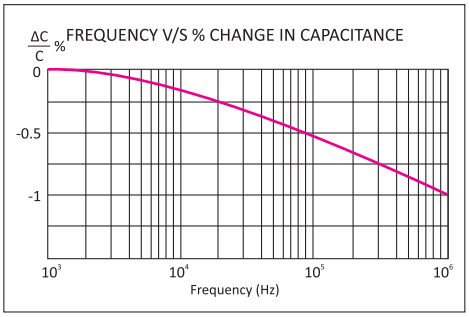

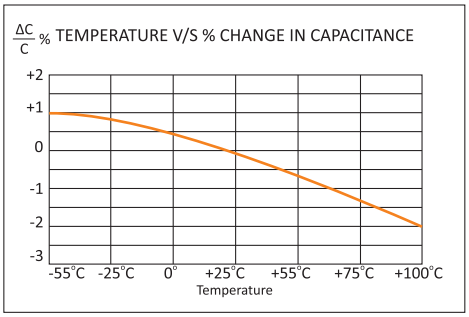

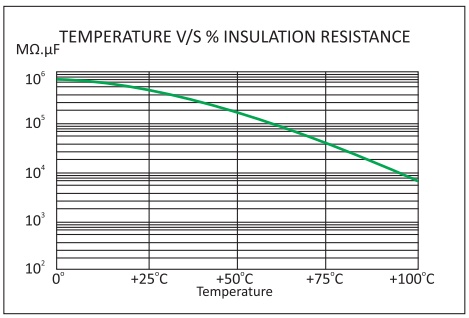

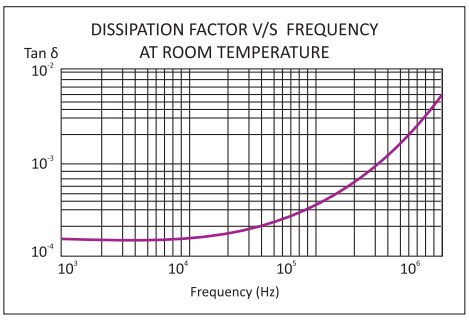

Highlights

- High DV/DT
- Low ESR
- Low loss polypropylene dielectric
- Impregnated elements eliminate corona
- Flame retardant UL94 - V0, ROHS compliant

Contruction

Extended foil electrodes and polypropylene film dielectric impregnated

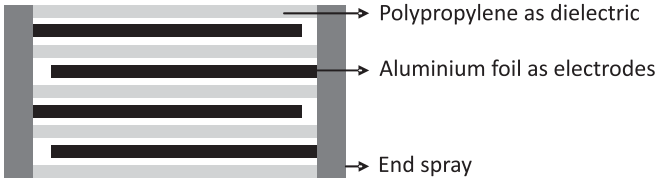

Applications

These capacitors are used in high voltage, high current and high pulse applications such as:

- IGBT protection circuits
- Snubber networks
- Low frequency tuning circuits

KP-3C

Technical Specifications

Physical Characteristics

▪ Dielectric material	Polypropylene film.
▪ Electrode material	Aluminium foil
▪ Winding construction	Extended foil electrodes and polypropylene film dielectric impregnated
▪ Enclosure	Preformed UL 94 V-0 plastic case with thermosetting resin-fill

Electrical Characteristics

▪ Capacitance range	0.1 MFD to 3.0 MFD
▪ Capacity tolerance	±5%(J), ±10%(K)
▪ Rated voltage VDC	1000, 1250, 1500, 2000
▪ Rated voltage VAC	480, 550, 630, 750
▪ Test voltage between terminals	2.5x rated voltage VDC for 10 seconds
▪ Test voltage terminal to case	3KVAC at 50Hz for 60 seconds
▪ Dissipation factor (Tan d)	$\leq$0.0005 at 1 Khz and 25°C
▪ Temperature range	-40°C to +85°C
▪ Insulation resistance at 25°C & at a test voltage of 500 VDC applied for 1 minute	C $\leq$ 0.33 MFD $\geq$100,000MΩ C > 0.33 MFD $\geq$30,000MΩ

Marking on Capacitors

Each capacitor will have the following information printed on it, sequentially:

- The Company's symbol followed by the words ALCON
- The capacitor grade viz KP-3C
- The capacitance value MFD
- The rated voltage VDC
- Capacity tolerance and manufacturing code
- Part number on non-standard capacitors

KP-3C

Standard Capacitor Values

Working Voltage 1000 VDC (480 VAC)

Rated Capacitance MFD	Case Code	DV/DT V/µ Sec	I Peak Amps	Irms Max at 100KHz & 55°C Amps	ESR Max at100KHz mΩ	Ordering Code*
0.100	K2	900	90.00	5.60	11.20	SI00U101000AG0K2_ _ _ _K01
0.150	K2	900	135.00	5.70	10.80	SI00U151000AG0K2_ _ _ _K01
0.220	K3	900	198.00	6.80	10.40	SI00U221000AG0K3_ _ _ _K01
0.220	B1,C1	900	198.00	18.20	4.20	SI00U221000AG_ _ _ _ _ _ _K01
0.270	B1,C1	900	243.00	18.70	4.00	SI00U271000AG_ _ _ _ _ _ _K01
0.330	B1,C1	900	297.00	19.70	3.70	SI00U331000AG_ _ _ _ _ _ _K01
0.390	B1	900	351.00	20.60	3.70	SI00U391000AG0B1_ _ _ _K01
0.390	C1	900	351.00	20.60	3.50	SI00U391000AG0C1_ _ _ _K01
0.470	B5	900	423.00	21.10	3.50	SI00U471000AG0B5_ _ _ _K01
0.560	B5	800	392.00	21.30	3.50	SI00U561000AG0B5_ _ _ _K01
0.680	B5	800	476.00	21.30	3.20	SI00U681000AG0B5_ _ _ _K01
0.750	B5,B2	800	525.00	25.60	3.00	SI00U751000AG_ _ _ _ _ _ _K01
0.820	B5	800	574.00	26.00	3.00	SI00U821000AG0B5_ _ _ _K01
1.000	B5	900	900.00	26.00	3.00	SI000011000AG0B5_ _ _ _K01
1.000	B3	800	900.00	26.00	3.00	SI000011000AG0B3_ _ _ _K01
1.200	B3	800	960.00	26.00	2.50	SI001U21000AG0B3_ _ _ _K01
1.500	B3	800	1200.00	26.00	2.50	SI01U501000AG0B3_ _ _ _K01
1.750	B4	500	875.00	28.00	2.50	SI01U751000AG0B4_ _ _ _K01
2.000	B4	500	1000.00	28.20	2.50	SI000021000AG0B4_ _ _ _K01
2.200	C2	400	880.00	28.50	2.40	SI002U21000AG0C2_ _ _ _K01
2.500	C2	400	1000.00	29.00	2.20	SI002U51000AG0C2_ _ _ _K01
3.000	C2	400	1200.00	30.00	2.00	SI000031000AG0C2_ _ _ _K01

Working Voltage 1250 VDC (550 VAC)

Rated Capacitance MFD	Case Code	DV/DT V/µ Sec	I Peak Amps	Irms Max at 100KHz & 55°C Amps	ESR Max at100KHz mΩ	Ordering Code*
0.100	K2	1000	100.00	5.60	11.20	SI00U101250AG0K2_ _ _ _K01
0.150	K2	1000	150.00	5.70	10.80	SI00U151250AG0K2_ _ _ _K01
0.220	K3	1000	220.00	6.80	10.40	SI00U221250AG0K3_ _ _ _K01
0.220	B1,C1	1000	220.00	18.20	4.20	SI00U221250AG_ _ _ _ _ _ _K01
0.270	B1,C1	1000	270.00	18.70	4.00	SI00U271250AG_ _ _ _ _ _ _K01
0.330	B1,C1	1000	330.00	19.70	3.70	SI00U331250AG_ _ _ _ _ _ _K01
0.390	B1,C1	1000	390.00	20.60	3.70	SI00U391250AG_ _ _ _ _ _ _K01
0.470	B5	1000	470.00	21.10	3.50	SI00U471250AG0B5_ _ _ _K01
0.560	B5	1000	560.00	21.30	3.50	SI00U561250AG0B5_ _ _ _K01
0.680	B5	900	612.00	21.30	3.20	SI00U681250AG0B5_ _ _ _K01
0.750	B5,B2	900	675.00	25.60	3.00	SI00U751250AG_ _ _ _ _ _ _K01
0.820	B5	900	738.00	26.00	3.00	SI00U821250AG0B5_ _ _ _K01
1.000	B5	900	900.00	26.00	3.00	SI000011250AG0B5_ _ _ _K01
1.000	B3	1000	1000.00	26.00	3.00	SI000011250AG0B3_ _ _ _K01

Custom-designed capacitors are available on request
Refer to “Capacitor Drawing”on page 5 to 8

KP-3C

Standard Capacitor Values

Working Voltage 1250 VDC (550 VAC)

Rated Capacitance MFD	Case Code	DV/DT V/µ Sec	I Peak Amps	Irms Max at 100KHz & 55°C Amps	ESR Max at100KHz mΩ	Ordering Code*
1.200	B3	900	1080.00	26.00	2.50	SI001U21250AG0B3_ _ _ _K01
1.500	B3	900	1350.00	26.00	2.50	SI01U501250AG0B3_ _ _ _K01
1.750	B4	600	1050.00	28.00	2.50	SI01U751250AG0B4_ _ _ _K01
2.000	B4	600	1100.00	28.20	2.50	SI000021250AG0B4_ _ _ _K01
2.200	C2	500	880.00	28.50	2.40	SI002U21250AG0C2_ _ _ _K01
2.500	C2	500	1250.00	29.00	2.20	SI002U51250AG0C2_ _ _ _K01
3.000	C2	500	1500.00	30.00	2.00	SI000031250AG0C2_ _ _ _K01

Working Voltage 1500 VDC (630 VAC)

Rated Capacitance MFD	Case Code	DV/DT V/µ Sec	I Peak Amps	Irms Max at 100KHz & 55°C Amps	ESR Max at100KHz mΩ	Ordering Code*
0.100	K2	1100	110.00	5.60	11.20	SI00U101500AG0K2_ _ _ _K01
0.150	K2	1100	165.00	5.70	10.80	SI01U501500AG0K2_ _ _ _K01
0.220	K4	1100	242.00	6.80	10.40	SI00U221500AG0K4_ _ _ _K01
0.220	B1,C1	1100	242.00	18.20	4.20	SI00U221500AG0_ _ _ _ _ _K01
0.270	B1,C1	1100	297.00	18.70	4.00	SI00U271500AG_ _ _ _ _ _ _K01
0.330	B1,C1	1100	363.00	19.70	3.70	SI00U331500AG_ _ _ _ _ _ _K01
0.390	B1	1100	429.00	20.60	3.70	SI00U391500AG0B1_ _ _ _K01
0.390	C1	1100	429.00	20.60	3.50	SI00U391500AG0C1_ _ _ _K01
0.470	B5	1100	517.00	21.10	3.50	SI00U471500AG0B5_ _ _ _K01
0.560	B5	1000	560.00	21.30	3.50	SI00U561500AG0B5_ _ _ _K01
0.680	B5	1000	680.00	21.30	3.20	SI00U681500AG0B5_ _ _ _K01
0.750	B5,B2	1000	750.00	25.60	3.00	SI00U751500AG_ _ _ _ _ _ _K01
0.820	B5	1000	820.00	26.00	3.00	SI00U821500AG0B5_ _ _ _K01
1.000	B3	1000	1000.00	26.00	3.00	SI000011500AG0B3_ _ _ _K01
1.200	B3	1000	1200.00	26.00	2.50	SI001U21500AG0B3_ _ _ _K01
1.500	B3	1000	1500.00	26.00	2.50	SI001U51500AG0B3_ _ _ _K01
1.750	B4	700	1225.00	28.00	2.50	SI01U751500AG0B4_ _ _ _K01
2.000	B4	700	1400.00	28.20	2.50	SI000021500AG0B4_ _ _ _K01
2.200	C2	600	1320.00	28.50	2.40	SI002U21500AG0C2_ _ _ _K01
2.500	C2	600	1500.00	29.00	2.20	SI002U51500AG0C2_ _ _ _K01
3.000	C2	600	1800.00	30.00	2.00	SI000031500AG0C2_ _ _ _K01

Working Voltage 2000 VDC (750 VAC)

Rated Capacitance MFD	Case Code	DV/DT V/µ Sec	I Peak Amps	Irms Max at 100KHz & 55°C Amps	ESR Max at100KHz mΩ	Ordering Code*
0.100	B1	1300	130.00	13.20	8.40	SI00U102000AG0B1_ _ _ _K01
0.150	B5	1200	180.00	15.11	7.00	SI01U502000AG0B5_ _ _ _K01
0.220	B5	1200	264.00	19.80	4.50	SI00U222000AG0B5_ _ _ _K01
0.270	B5	1200	324.00	21.70	4.30	SI00U272000AG0B5_ _ _ _K01
0.330	B3	1200	396.00	22.20	4.10	SI00U332000AG0B3_ _ _ _K01
0.390	B3	1200	468.00	22.50	4.00	SI00U392000AG0B3_ _ _ _K01
0.470	B3	1200	564.00	22.50	4.00	SI00U472000AG0B3_ _ _ _K01
0.560	B4	1000	560.00	22.70	3.80	SI00U562000AG0B4_ _ _ _K01
0.680	B4	1000	680.00	22.80	3.70	SI00U682000AG0B4_ _ _ _K01
0.750	C2	800	600.00	23.20	3.40	SI00U752000AG0C2_ _ _ _K01
0.820	C2	800	656.00	23.20	3.30	SI00U822000AG0C2_ _ _ _K01
1.000	C2	800	800.00	23.30	3.20	SI000012000AG0C2_ _ _ _K01

Custom-designed capacitors are available on request
Refer to “Capacitor Drawing”on page 5 to 8

KP-3C

Capacitor Drawings and Terminal Styles

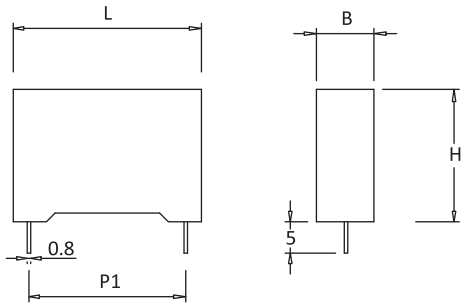

Terminal style : DL
Case code : K2,K3,K4

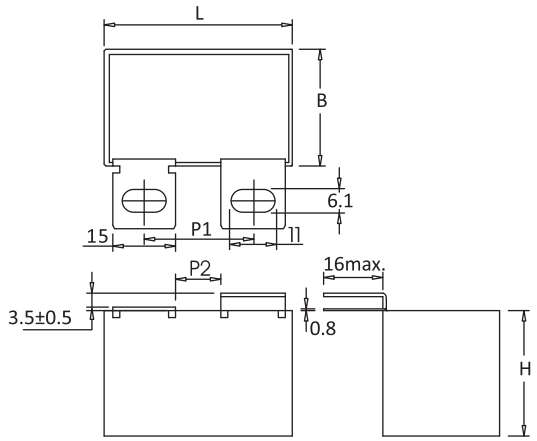

Terminal style : SL
Case code : B1,B2,B3,B4,B5,C2

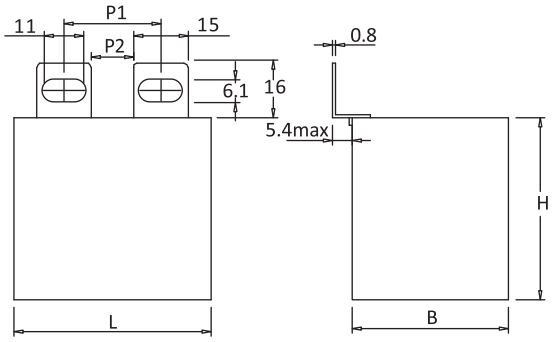

Terminal style : TL
Case code : B1,B2,B3,B4,B5,C2

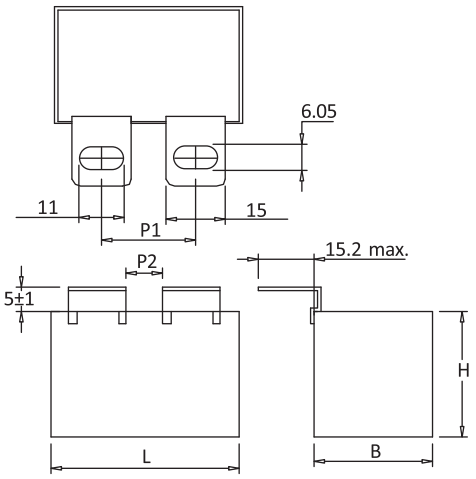

Terminal style : RL
Case code : B1,B2,B3,B4,B5,C2

Dimensions in mm
For details see Case Code table on page 9

KP-3C

Capacitor Drawings and Terminal Styles

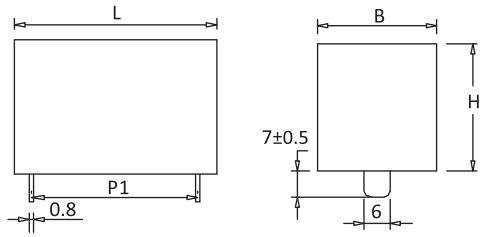

Terminal style : FT
Case code : B1,B2, B3, B5

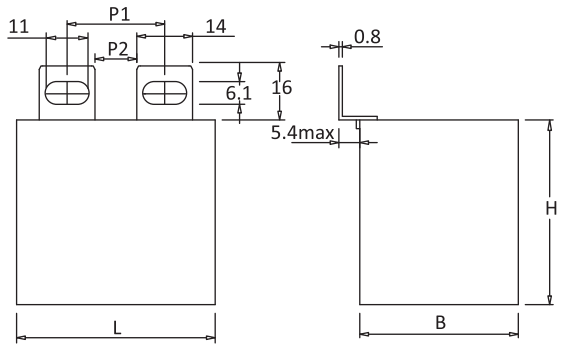

Terminal style : MTL
Case code : B1,B2,B3,B4,B5,C2

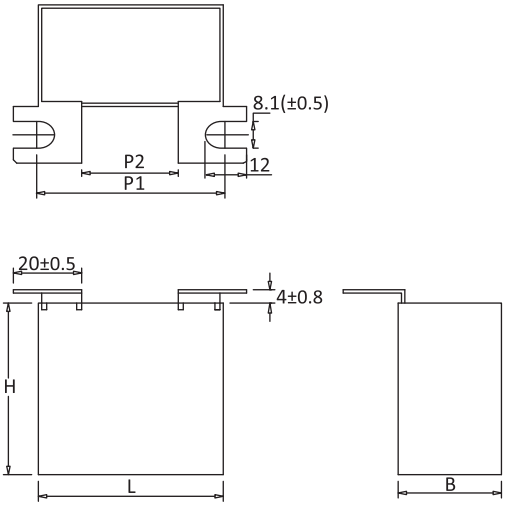

Terminal style : CL
Case code : B4,C2

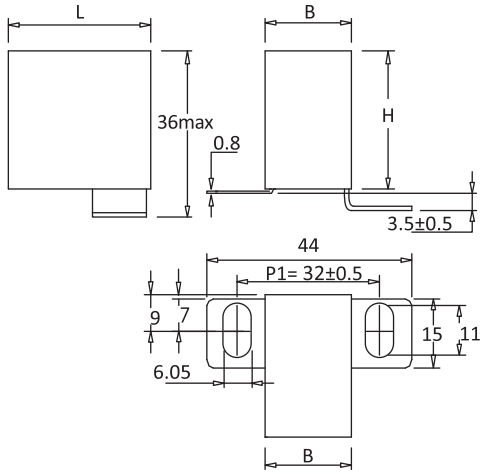

Terminal style : CT
Case code : C1

Dimensions in mm
For details see Case Code table on page 9

KP-3C

Capacitor Drawings and Terminal Styles

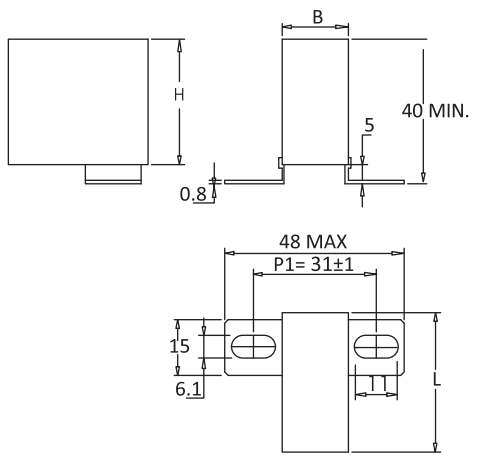

Terminal style : CR
Case code : C1

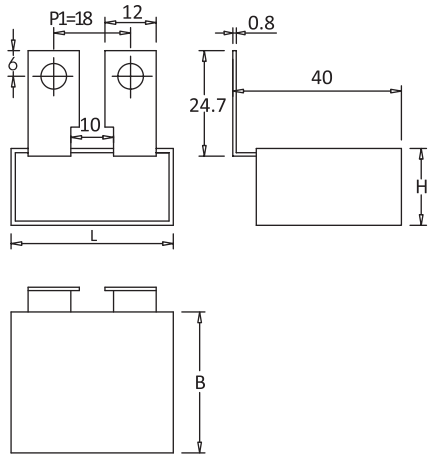

Terminal style :AB
Case code : C1

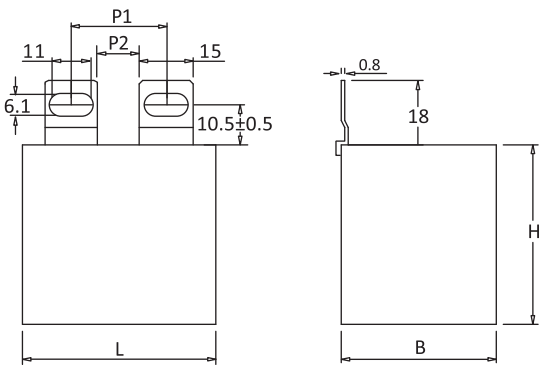

Terminal style : STL
Case code : B1,B2,B4,B5,C2

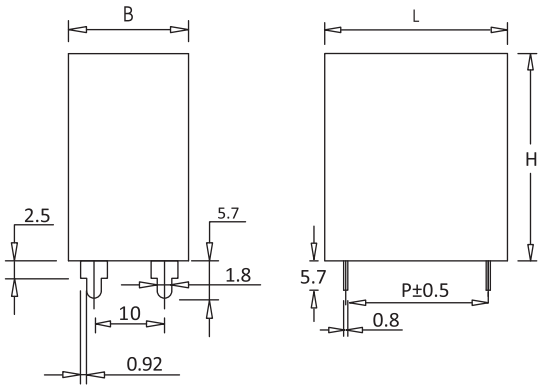

Terminal style : 2P
Case code : B1,B3,B5

Dimensions in mm
For details see Case Code table on page 9

KP-3C

Capacitor Drawings and Terminal Styles

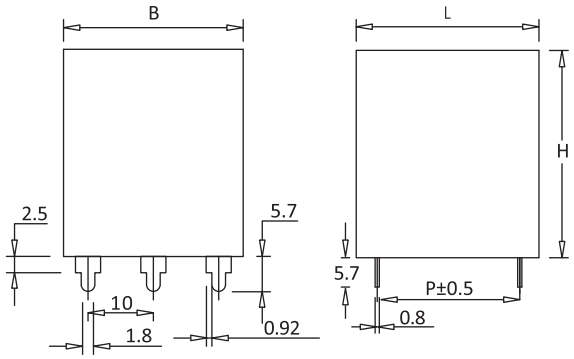

Terminal style : 3P
Case code : B4

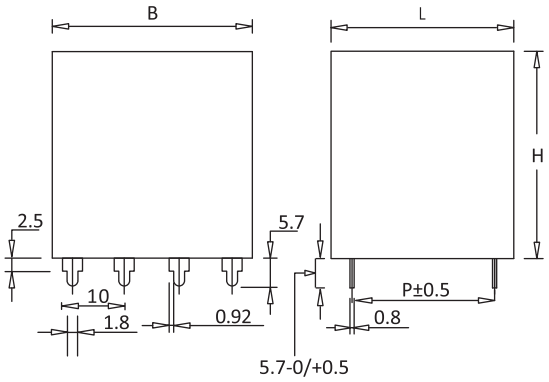

Terminal style : 4P
Case code : C2

Dimensions in mm
For details see Case Code table on page 9

KP-3C

Table of Case Codes and Dimensions

Case Code	Dimensions in mm*			P1	P2	Terminal Styles
	B±1	H±1	L±1	P±0.5		
K2	11	20	32.0	27.5	--	DL
K3	13	22	32.0	27.5	--	DL
K4	14	24	32.0	27.5	--	DL
B1	17	29	41.5	32.5	–	DL,FT,2P
B1	17	29	41.5	39.0	–	DL,FT,2P
B1	17	29	41.5	23.5	8.5	TL,RL,STL,SL
B1	17	29	41.5	24.5	10.5	MTL
B2	24	38	45.0	23.5	8.5	TL,RL,STL,SL
B2	24	38	45.0	24.5	10.5	MTL
B3	30	45	45.0	39.0	-	FT,2P
B3	30	45	45.0	27.0	13.0	MTL
B3	30	45	45.0	26.5	11.5	TL,RL,STL,SL
B4	30	50	54.0	27.0	11.5	TL,RL,STL,SL
B4	30	50	54.0	48.0	–	3P
B4	30	50	54.0	55.0	28.0	CL
B4	30	50	54.0	27.0	13.0	MTL
B5	28	30	45.0	27.0	11.5	TL,RL,STL,SL
B5	28	30	45.0	27.0	13.0	MTL
B5	28	30	45.0	39.0	–	FT,2P
C1	18	33	38.0	33.0	–	CR
C1	18	33	38.0	31.0	–	CT
C1	18	33	38.0	18.0	–	AB
C2	43	50	54.0	26.5	11.5	TL,RL,STL,SL
C2	43	50	54.0	27.0	13.0	MTL
C2	43	50	54.0	55.0	28.0	CL
C2	43	50	54.0	48.5	–	4P

* Refer to “Capacitor Drawings” on page 5 to 8

Precaution

1. These capacitors are not suitable for ‘across the line’ applications
2. VAC (rated) : Frequency should be less than 1000Hz
3. VDC(rated) : 1.4 x Vrms + VDC should be less than rated VDC

Catalogue No. AEPL KP - 3C - JUNE - 2019 (Rev 00)

MP-4

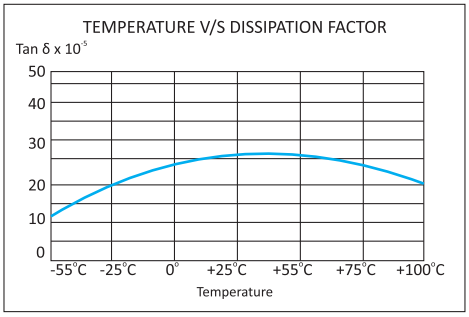

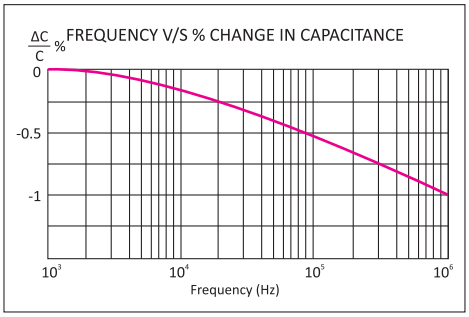

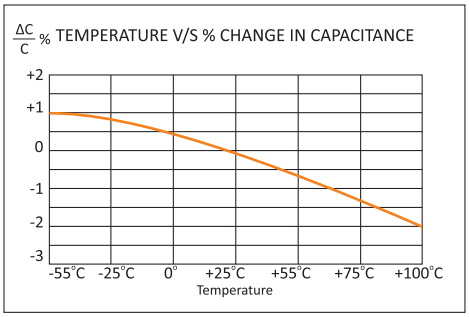

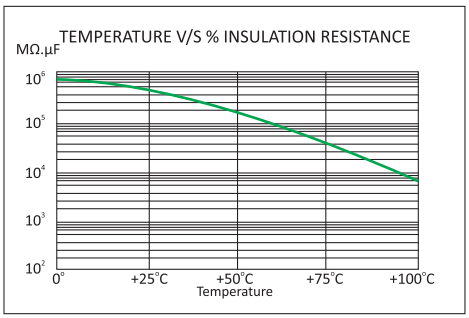

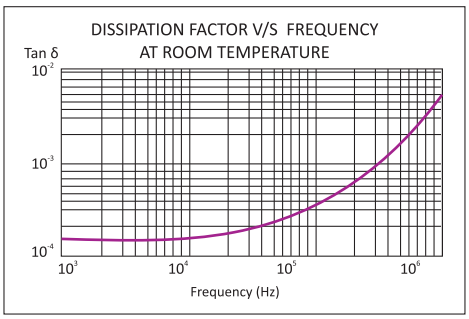

Highlights

- Self-healing property
- High DV / DT
- Low ESR
- Low loss polypropylene dielectric
- Reference standard-IEC 61071
- Flame retardant UL94 - V0, ROHS compliant

Construction

Extended double metallised polyester electrodes with metallised polypropylene dielectric internal series connection

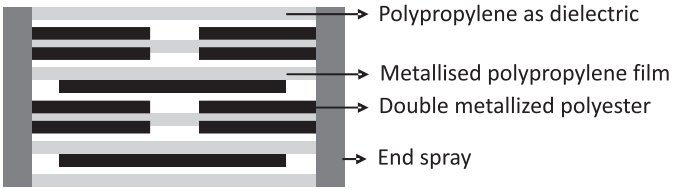

Applications

These capacitors are used in high voltage, high current and high pulse applications such as:

- IGBT protection circuits
- Snubber networks
- Energy conversion and control in power electronics
- Protection circuits in SMPS

MP-4

Technical Specifications

Physical Characteristics

▪ Dielectric material	Polypropylene film.
▪ Electrode material	Double metallized polyester and metallized polypropylene film.
▪ Winding construction	Extended double metallised polyester electrodes with metallised polypropylene dielectric internal series connection
▪ Enclosure	Preformed UL 94 V-0 plastic case with thermosetting resin-fill

Electrical Characteristics

▪ Capacitance range	0.1 MFD to 6.3 MFD
▪ Capacity tolerance	±5%(J), ±10%(K)
▪ Rated voltage VDC	700, 850, 1000, 1200, 1500, 2000, 2500, 3000
▪ Rated voltage VAC	420, 500, 575, 630, 650, 700, 725, 750
▪ Test voltage between terminals	2 x rated voltage VDC for 2 seconds
▪ Test voltage terminal to case	3KVAC at 50Hz for 60 seconds
▪ Dissipation factor (Tan d)	$\leq$0.0005 at 1 KHz and 25°C
▪ Temperature range	-40°C to +85°C
▪ Insulation resistance at 25°C & at a test voltage of 500 VDC applied for 1 minute	C $\leq$ 0.33 MFD $\geq$100,000MΩ C > 0.33 MFD $\geq$30,000MΩ

Marking on Capacitors

Each capacitor will have the following information printed on it, sequentially:

- The Company's symbol followed by the words ALCON
- The capacitor grade viz MP-4
- The capacitance value MFD
- The rated voltage VDC
- Capacity tolerance and manufacturing code
- Part number on non-standard capacitors

MP-4

Standard Capacitor Values

Working Voltage 700 VDC (420 VAC)

Rated Capacitance MFD	Case Code	DV/DT V/µ Sec	I Peak Amps	Irms Max at 100KHz & 70°C Amps	Typical ESR at100KHz mΩ	Ordering Code*
1.000	B1	615	615.00	15.50	3.30	SI000010700AH0B1_ _ _ _K01
1.200	H7	615	738.00	17.50	3.10	SI01U200700AH0H7_ _ _ _K01
1.500	H1	615	922.50	19.00	2.80	SI01U500700AH0H1_ _ _ _K01
2.000	H1,H4	615	1230.00	23.50	2.50	SI000020700AH_ _ _ _ _ _ _K01
2.200	H1	615	1353.00	24.00	2.40	SI02U200700AH0H1_ _ _ _K01
2.500	H4	615	1537.50	24.50	2.20	SI02U500700AH0H4_ _ _ _K01
3.000	E3	400	1200.00	27.50	2.10	SI000030700AH0E3_ _ _ _K01
3.300	E3	400	1320.00	28.00	2.10	SI03U300700AH0E3_ _ _ _K01
3.500	C2	400	1400.00	28.50	2.00	SI03U500700AH0C2_ _ _ _K01
4.000	H5,C2	400	1600.00	29.00	2.30	SI000040700AH_ _ _ _ _ _ _K01
4.700	H6,C2	400	1880.00	32.00	2.10	SI04U700700AH_ _ _ _ _ _ _K01
5.000	H6,C2	400	2000.00	32.00	2.10	SI000050700AH_ _ _ _ _ _ _K01
5.600	H6,C2	400	2240.00	33.50	2.00	SI05U600700AH_ _ _ _ _ _ _K01
6.300	H6,C2	400	2520.00	34.50	1.90	SI06U300700AH_ _ _ _ _ _ _K01

Working Voltage 850 VDC (500VAC)

Rated Capacitance MFD	Case Code	DV/DT V/µ Sec	I Peak Amps	Irms Max at 100KHz & 70°C Amps	Typical ESR at100KHz mΩ	Ordering Code*
0.680	B1	760	516.80	15.00	3.50	SI00U680850AH0B1_ _ _ _K01
0.820	H7	760	623.20	16.50	3.10	SI00U820850AH0H7_ _ _ _K01
1.000	H7	760	760.00	18.50	2.70	SI000010850AH0H7_ _ _ _K01
1.500	H1	760	1140.00	24.50	2.20	SI01U500850AH0H1_ _ _ _K01
1.750	H1,H4	760	1330.00	25.50	2.10	SI01U750850AH_ _ _ _ _ _ _K01
2.000	H4	760	1520.00	28.00	2.00	SI000020850AH0H4_ _ _ _K01
2.200	H4	760	1672.00	28.50	2.00	SI02U200850AH0H4_ _ _ _K01
2.500	H4	760	1900.00	29.00	1.90	SI02U500850AH0H4_ _ _ _K01
3.000	H5,E3	450	1350.00	29.50	2.20	SI000030850AH_ _ _ _ _ _ _K01
3.300	H5,E3	450	1485.00	30.00	2.10	SI03U300850AH_ _ _ _ _ _ _K01
4.000	H6,C2	450	1800.00	33.50	1.90	SI000040850AH_ _ _ _ _ _ _K01
4.700	H6,C2	450	2115.00	34.50	1.80	SI04U700850AH_ _ _ _ _ _ _K01
5.600	H6,C2	360	2016.00	28.50	3.20	SI05U600850AH_ _ _ _ _ _ _K01

Working Voltage 1000 VDC (575VAC)

Rated Capacitance MFD	Case Code	DV/DT V/µ Sec	I Peak Amps	Irms Max at 100KHz & 70°C Amps	Typical ESR at100KHz mΩ	Ordering Code*
0.470	B1	880	413.60	14.00	3.90	SI00U471000AH0B1_ _ _ _K01
0.680	H7	880	598.40	16.50	3.30	SI00U681000AH0H7_ _ _ _K01
0.750	H7,H1	880	660.00	17.50	3.10	SI00U751000AH_ _ _ _ _ _ _K01
1.000	H1	880	880.00	22.50	3.10	SI000011000AH0H1_ _ _ _K01
1.200	H1	880	1056.00	23.50	2.50	SI01U201000AH0H1_ _ _ _K01
1.500	H1	880	1320.00	25.00	2.20	SI01U501000AH0H1_ _ _ _K01
1.750	H4	880	1540.00	27.00	2.10	SI01U751000AH0H4_ _ _ _K01
2.000	H4	880	1760.00	28.00	2.00	SI000021000AH0H4_ _ _ _K01
2.200	H4	750	1650.00	24.00	3.30	SI02U201000AH0H4_ _ _ _K01
2.200	H5	505	1111.00	27.50	2.50	SI02U201000AH0H5_ _ _ _K01
2.500	H4	750	1875.00	24.50	3.10	SI02U501000AH0H4_ _ _ _K01
3.000	H5,C2	450	1350.00	24.50	3.70	SI000031000AH0H6_ _ _ _K01
3.000	H6	505	1515.00	32.00	2.10	SI000031000AH_ _ _ _ _ _ _K01
3.300	H5,C2	450	1485.00	25.50	3.50	SI03U301000AH_ _ _ _ _ _ _K01
3.300	H6,C2	505	1666.50	32.50	2.00	SI03U301000AH_ _ _ _ _ _ _K01
4.000	H6,C2	450	1800.00	29.50	3.10	SI000041000AH_ _ _ _ _ _ _K01

Custom-designed capacitors are available on request
Refer to “Capacitor Drawing”on page 7 to 11

MP-4

Standard Capacitor Values

Working Voltage 1200 VDC (630 VAC)

Rated Capacitance MFD	Case Code	DV/DT V/µ Sec	I Peak Amps	Irms Max at 100KHz & 70°C Amps	Typical ESR at100KHz mΩ	Ordering Code*
0.330	B1	1010	333.30	12.00	5.10	SI00U331200AH0B1_ _ _ _K01
0.330	H7	1010	333.30	12.50	5.10	SI00U331200AH0H7_ _ _ _K01
0.390	B1	1010	393.90	13.00	4.60	SI00U391200AH0B1_ _ _ _K01
0.390	H7	1010	393.90	14.00	4.60	SI00U391200AH0H7_ _ _ _K01
0.470	H7	1010	474.70	15.00	4.10	SI00U471200AH0H7_ _ _ _K01
0.560	H7	1010	565.60	16.00	3.70	SI00U561200AH0H7_ _ _ _K01
0.680	H1	1010	686.80	20.00	3.30	SI00U681200AH0H1_ _ _ _K01
0.820	H1	1010	828.20	21.00	3.00	SI00U821200AH0H1_ _ _ _K01
1.000	H1	1010	1010.00	22.50	2.70	SI000011200AH0H1_ _ _ _K01
1.200	H1	870	1044.00	20.00	4.10	SI01U201200AH0H1_ _ _ _K01
1.200	H4	1010	1212.00	25.00	2.40	SI01U201200AH0H4_ _ _ _K01
1.500	H4	1010	1515.00	27.50	2.10	SI01U501200AH0H4_ _ _ _K01
2.000	H4	870	1740.00	24.50	3.30	SI000021200AH0H4_ _ _ _K01
2.000	H5	580	1160.00	28.00	2.40	SI000021200AH0H5_ _ _ _K01
2.200	H5,C2	500	1100.00	23.50	4.10	SI02U201200AH_ _ _ _ _ _ _K01
2.200	H6,C2	580	1276.00	31.00	2.30	SI02U201200AH_ _ _ _ _ _ _K01
2.500	H5,C2	500	1250.00	24.50	3.80	SI02U501200AH_ _ _ _ _ _ _K01
2.500	H6,C2	580	1450.00	32.50	2.10	SI02U501200AH_ _ _ _ _ _ _K01
3.000	H6,C2	500	1500.00	28.00	3.40	SI000031200AH_ _ _ _ _ _ _K01
3.300	H6	500	1650.00	28.50	3.20	SI03U301200AH0H6_ _ _ _K01

Working Voltage 1500 VDC (650 VAC)

Rated Capacitance MFD	Case Code	DV/DT V/µ Sec	I Peak Amps	Irms Max at 100KHz & 70°C Amps	Typical ESR at100KHz mΩ	Ordering Code*
0.220	B1	1225	269.50	11.00	6.10	SI00U221500AH0B1_ _ _ _K01
0.330	H7	1225	404.25	14.00	4.60	SI00U331500AH0H7_ _ _ _K01
0.390	H7	1225	477.75	14.50	4.30	SI00U391500AH0H7_ _ _ _K01
0.470	H1	1225	575.75	19.00	3.70	SI00U471500AH0H1_ _ _ _K01
0.680	H5	1225	833.00	21.00	3.10	SI00U681500AH0H5_ _ _ _K01
0.750	H1	1225	918.75	22.00	2.80	SI00U751500AH0H1_ _ _ _K01
1.000	H4	1225	1225.00	23.00	2.50	SI000011500AH0H4_ _ _ _K01
1.200	H5,C2	730	876.00	26.00	2.80	SI01U201500AH_ _ _ _ _ _ _K01
1.500	H6,C2	730	1095.00	29.50	2.50	SI01U501500AH_ _ _ _ _ _ _K01
1.800	H6,C2	730	1314.00	30.50	2.30	SI01U801500AH_ _ _ _ _ _ _K01
2.200	H6,C2	575	1265.00	26.50	3.70	SI02U201500AH_ _ _ _ _ _ _K01
2.500	H6,C2	575	1437.50	27.50	3.40	SI02U501500AH_ _ _ _ _ _ _K01

Custom-designed capacitors are available on request
Refer to “Capacitor Drawing”on page 7 to 11

MP-4

Standard Capacitor Values

Working Voltage 2000 VDC (700 VAC)

Rated Capacitance MFD	Case Code	DV/DT V/µ Sec	I Peak Amps	Irms Max at 100KHz & 70°C Amps	Typical ESR at100KHz mΩ	Ordering Code*
0.100	B1	1610	161.00	8.00	12.50	SI00U102000AH0B1_ _ _ _K01
0.100	H7	1610	161.00	8.50	12.50	SI00U102000AH0H7_ _ _ _K01
0.150	H7	1610	241.50	11.00	7.50	SI00U152000AH0H7_ _ _ _K01
0.220	H7	1610	354.20	13.50	5.10	SI00U222000AH0H7_ _ _ _K01
0.330	H7	1220	402.60	12.50	7.40	SI00U332000AH0H7_ _ _ _K01
0.330	H1	1610	531.30	18.00	4.10	SI00U332000AH0H1_ _ _ _K01
0.390	H1	1610	627.90	19.50	3.60	SI00U392000AH0H1_ _ _ _K01
0.470	H1	1220	573.40	16.50	6.00	SI00U472000AH0H1_ _ _ _K01
0.470	H4	1610	756.70	22.00	3.30	SI00U472000AH0H4_ _ _ _K01
0.560	H4	1610	901.60	23.00	3.00	SI00U562000AH0H4_ _ _ _K01
0.680	H1,H4	1220	829.60	18.00	5.00	SI00U682000AH_ _ _ _ _ _ _K01
0.680	H5,C2	935	635.80	23.00	3.50	SI00U682000AH_ _ _ _ _ _ _K01
0.820	H4	1220	1000.40	20.00	4.60	SI00U822000AH0H4_ _ _ _K01
0.820	H5,C2	935	766.70	24.50	3.10	SI00U822000AH_ _ _ _ _ _ _K01
1.000	H4	1220	1220.00	21.50	4.10	SI000012000AH0H4_ _ _ _K01
1.000	H6,C2	935	935.00	28.00	2.80	SI000012000AH_ _ _ _ _ _ _K01
1.200	H5,C2	725	870.00	22.50	4.50	SI01U202000AH_ _ _ _ _ _ _K01
1.200	H6,C2	935	1122.00	29.50	2.40	SI01U202000AH_ _ _ _ _ _ _K01
1.500	H6,C2	725	1087.50	26.00	4.00	SI01U502000AH_ _ _ _ _ _ _K01

Working Voltage 2500 VDC (725 VAC)

Rated Capacitance MFD	Case Code	DV/DT V/µ Sec	I Peak Amps	Irms Max at 100KHz & 70°C Amps	Typical ESR at100KHz mΩ	Ordering Code*
0.100	B1	2060	206.00	8.50	11.00	SI00U102500AH0B1_ _ _ _K01
0.100	H7	2060	206.00	9.00	11.00	SI00U102500AH0H7_ _ _ _K01
0.150	H7	2060	309.00	11.50	7.20	SI00U152500AH0H7_ _ _ _K01
0.220	H1	2060	453.20	16.00	5.20	SI00U222500AH0H1_ _ _ _K01
0.330	H1	2060	679.80	19.00	3.80	SI00U332500AH0H1_ _ _ _K01
0.470	H4	2060	968.20	23.00	3.00	SI00U472500AH0H4_ _ _ _K01
0.560	H5	1155	646.80	23.00	3.50	SI00U562500AH0H5_ _ _ _K01
0.680	H6	1155	785.40	26.00	3.20	SI00U682500AH0H6_ _ _ _K01
0.820	H6	1155	947.10	27.50	2.90	SI00U822500AH0H6_ _ _ _K01
1.000	H6	930	930.00	23.50	4.60	SI000012500AH0H6_ _ _ _K01
1.200	C2	930	1116.00	25.50	4.10	SI01U202500AH0H6_ _ _ _K01

Custom-designed capacitors are available on request
Refer to “Capacitor Drawing”on page 7 to 11

MP-4

Standard Capacitor Values

Working Voltage 3000 VDC (750 VAC)

Rated Capacitance MFD	Case Code	DV/DT V/µ Sec	I Peak Amps	Irms Max at 100KHz & 70°C Amps	Typical ESR at100KHz mΩ	Ordering Code*
0.047	B1	2515	118.20	7.00	16.50	SI0U0473000AH0B1_ _ _ _K01
0.047	H7	2515	118.20	7.50	16.50	SI0U0473000AH0H7_ _ _ _K01
0.068	B1	2515	171.02	8.00	11.50	SI0U0683000AH0B1_ _ _ _K01
0.068	H7	2515	171.02	9.00	11.50	SI0U0683000AH0H7_ _ _ _K01
0.100	H1	2515	251.50	12.50	8.50	SI00U103000AH0H1_ _ _ _K01
0.150	H1	2515	377.25	15.00	6.00	SI00U153000AH0H1_ _ _ _K01
0.220	H1	2050	451.00	14.50	8.20	SI00U223000AH0H1_ _ _ _K01
0.220	H4	2515	553.30	19.00	4.30	SI00U223000AH0H4_ _ _ _K01
0.330	H1	2050	676.50	16.50	6.10	SI00U333000AH0H1_ _ _ _K01
0.330	H5	1400	462.00	21.00	4.30	SI00U333000AH0H5_ _ _ _K01
0.470	H4	2050	963.50	19.50	5.00	SI00U473000AH0H4_ _ _ _K01
0.470	H6	1410	662.70	24.00	3.80	SI00U473000AH0H6_ _ _ _K01
0.680	H6,C2	1150	782.00	22.00	5.20	SI00U683000AH_ _ _ _ _ _ _K01
0.820	H6,C2	1150	943.00	24.00	4.70	SI00U823000AH_ _ _ _ _ _ _K01

Custom-designed capacitors are available on request
Refer to “Capacitor Drawing”on page 7 to 11

MP-4

Capacitor Drawings and Terminal Styles

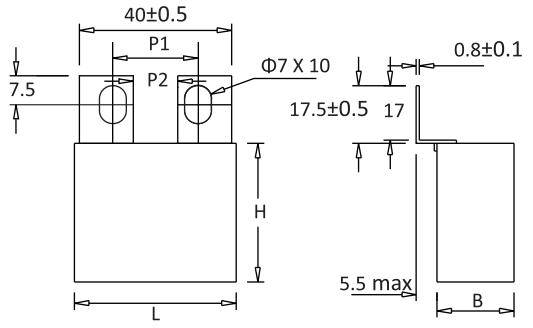

Terminal style : BBL
Case code : H1,H4,H7,H5,C2,H6,E3

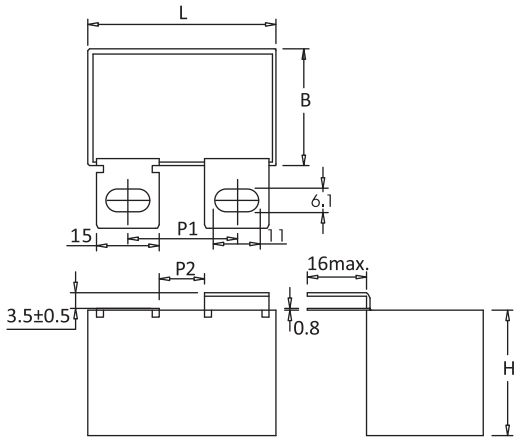

Terminal style : SL
Case code : B1,H1,H4,H5,H6,H7,C2,E3

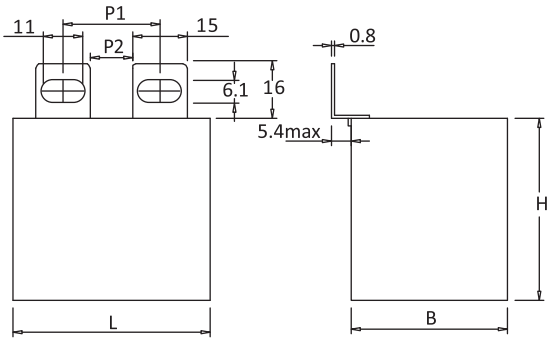

Terminal style : TL
Case code : B1,H1,H4,H5,H6,H7,C2,E3

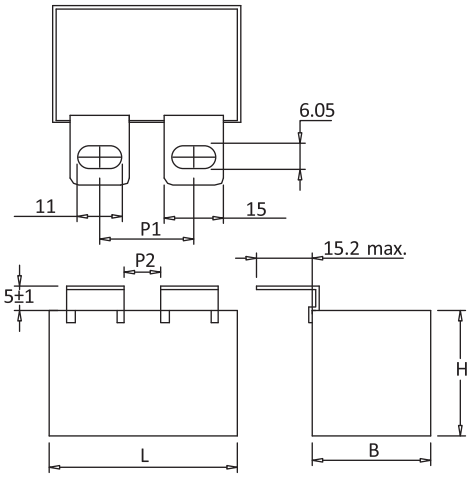

Terminal style : RL
Case code : B1,H1,H4,H5,H6,H7,C2,E3

Dimensions in mm
For details see Case Code table on page 12 & 13

MP-4

Capacitor Drawings and Terminal Styles

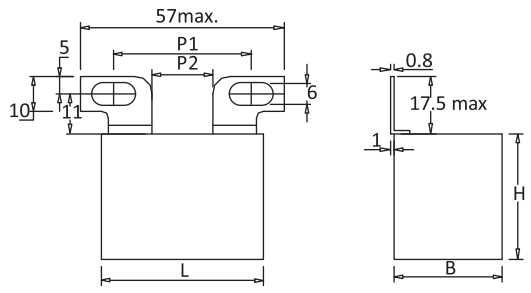

Terminal style : TP
Case code : H4,H5,H6,H1,B1,H7,C2,E3

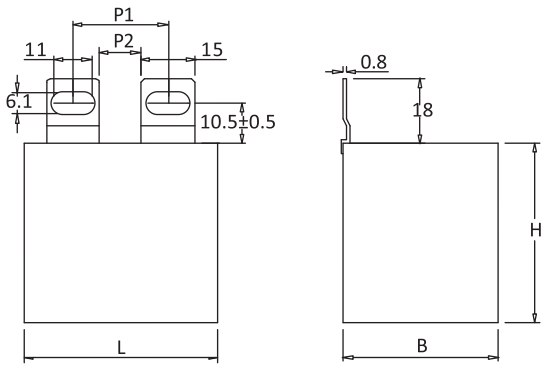

Terminal style : STL
Case code : B1,H1,H4,H5,H6,H7,C2,E3

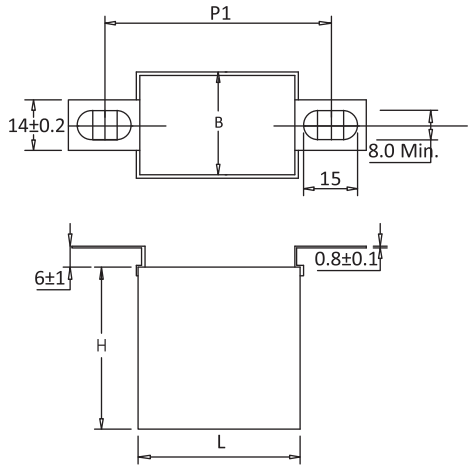

Terminal style : AD
Case code : H1,H4,H7,C2,H5,H6,E3

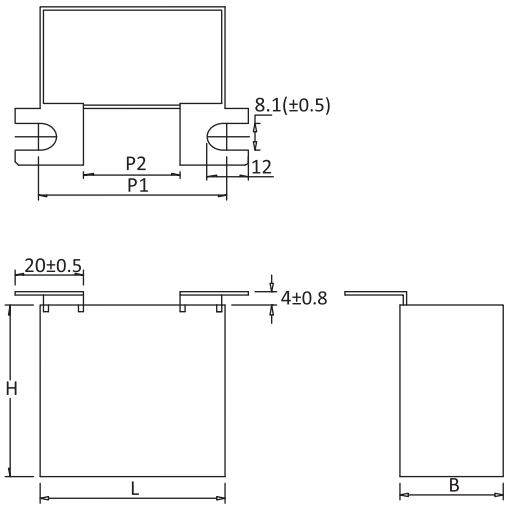

Terminal style : CL
Case code : H5,H6,C2,E3

Dimensions in mm
For details see Case Code table on page 12 & 13

MP-4

Capacitor Drawings and Terminal Styles

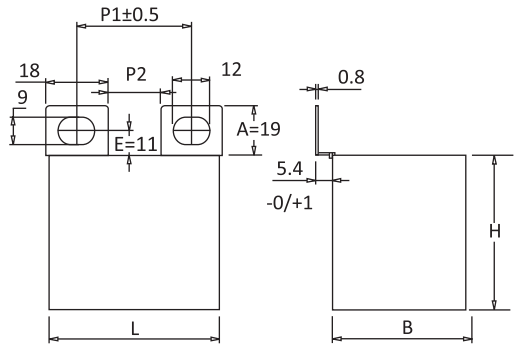

Terminal style : BTL
Case code : H1,H4,H5,H6,H7,C2,E3

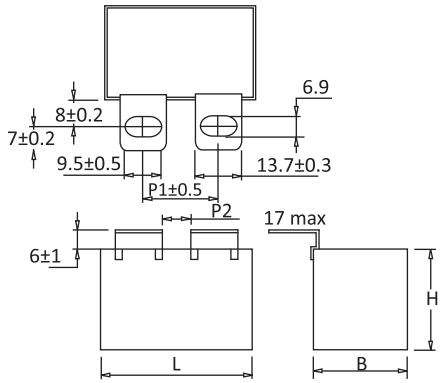

Terminal style : MRL
Case code : B1,H1,H4,H5,H6,H7,C2,E3

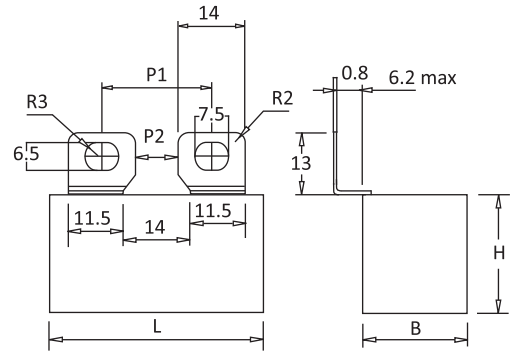

Terminal style : VN
Case code : B1,H1,H4,H7

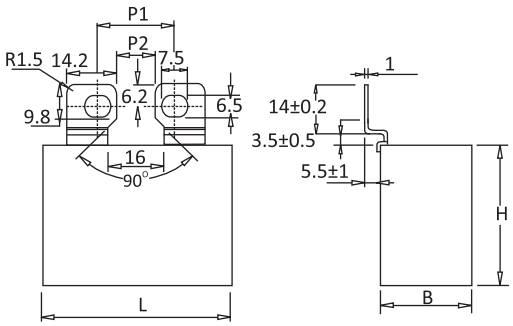

Terminal style : VT
Case code : H5,H6,C2,E3

Dimensions in mm
For details see Case Code table on page 12 & 13

MP-4

Capacitor Drawings and Terminal Styles

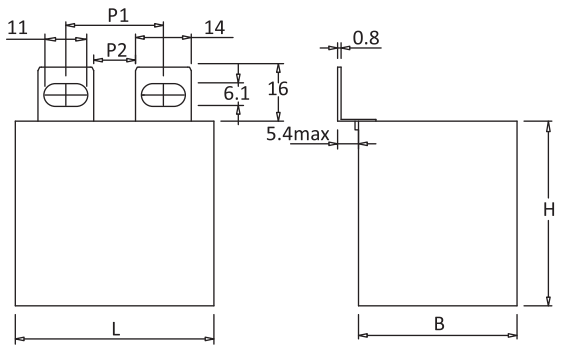

Terminal style : MTL
Case code : B1,H4,H5,H6,H7,H1,C2,E3

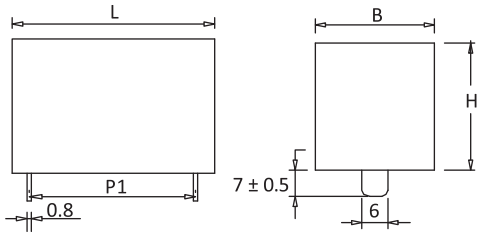

Terminal style : FT
Case code : B1,H4,H5,H6,H7,H1,C2,E3

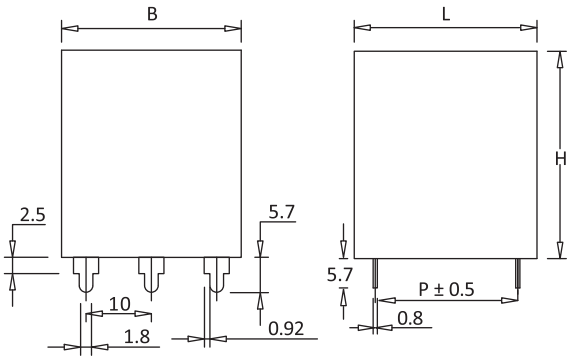

Terminal style : 3P
Case code : H1,H4,H5,H6,C2,E3

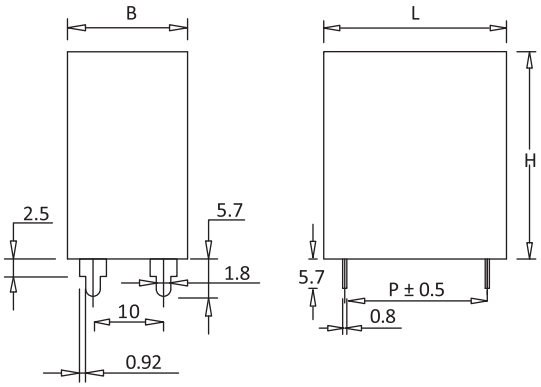

Terminal style : 2P
Case code : B1,H1,H4,H7,H6,C2,E3,H5

Dimensions in mm
For details see Case Code table on page 12 & 13

MP-4

Capacitor Drawings and Terminal Styles

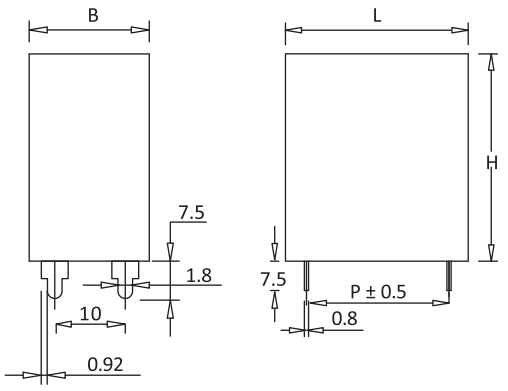

Terminal style : ADD
Case code : B1,H1,H4,H7,H5,H6,C2,E3

Dimensions in mm
For details see Case Code table on page 12 & 13

MP-4

Table of Case Codes and Dimensions

Case code	Dimensions in mm*			P1	P2	Terminal Styles
	B	H	L	P ±0.5		
B1	17.00	29.00	41.50	37.50	-	FT,2P,ADD
B1	17.00	29.00	41.50	23.50	8.50	TL,RL,STL,SL
B1	17.00	29.00	41.50	38.50	17.00	TP
B1	17.00	29.00	41.50	24.50	10.50	MTL
B1	17.00	29.00	41.50	23.00	9.00	VN
B1	17.00	29.00	41.50	25.00	11.00	MRL
H1	33.50	35.50	42.50	37.50	-	FT,2P,3P,ADD
H1	33.50	35.50	42.50	23.50	8.50	TL,RL,STL,SL
H1	33.50	35.50	42.50	38.50	17.00	TP
H1	33.50	35.50	42.50	24.50	10.50	MTL
H1	33.50	35.50	42.50	57.50	-	AD
H1	33.50	35.50	42.50	25.00	7.00	BTL
H1	33.50	35.50	42.50	23.00	9.00	VN
H1	33.50	35.50	42.50	22.00	11.50	BBL
H1	33.50	35.50	42.50	25.00	11.00	MRL
H4	33.00	45.00	42.50	37.50	-	FT,3P,2P,ADD
H4	33.00	45.00	42.50	23.50	8.50	TL,RL,STL,SL
H4	33.00	45.00	42.50	38.50	17.00	TP
H4	33.00	45.00	42.50	24.50	10.50	MTL
H4	33.00	45.00	42.50	57.50	-	AD
H4	33.00	45.00	42.50	25.00	7.00	BTL
H4	33.00	45.00	42.50	23.00	9.00	VN
H4	33.00	45.00	42.50	22.00	11.50	BBL
H4	33.00	45.00	42.50	25.00	11.00	MRL
H5	30.00	45.00	57.50	48.50	-	FT,2P,3P,ADD
H5	30.00	45.00	57.50	26.50	11.50	TL,RL,STL,SL
H5	30.00	45.00	57.50	27.00	13.00	MTL
H5	30.00	45.00	57.50	37.00	19.00	BTL
H5	30.00	45.00	57.50	22.00	11.10	VT
H5	30.00	45.00	57.50	55.00	28.00	CL
H5	30.00	45.00	57.50	38.00	24.00	MRL
H5	30.00	45.00	57.50	22.00	11.50	BBL
H5	30.00	45.00	57.50	38.50	17.00	TP
H5	30.00	45.00	57.50	65-78	-	AD
H6	35.00	50.00	57.50	48.50	-	FT,2P,3P,ADD
H6	35.00	50.00	57.50	26.50	11.50	TL,RL,STL,SL
H6	35.00	50.00	57.50	27.00	13.00	MTL
H6	35.00	50.00	57.50	37.00	19.00	BTL
H6	35.00	50.00	57.50	22.00	11.10	VT
H6	35.00	50.00	57.50	55.00	28.00	CL
H6	35.00	50.00	57.50	38.00	24.00	MRL
H6	35.00	50.00	57.50	22.00	11.50	BBL
H6	35.00	50.00	57.50	38.50	17.00	TP
H6	35.00	50.00	57.50	65-78	-	AD
H7	24.50	27.50	42.50	37.50	-	FT,2P,ADD
H7	24.50	27.50	42.50	38.50	17.00	TP
H7	24.50	27.50	42.50	23.50	8.50	TL,RL,STL,SL
H7	24.50	27.50	42.50	24.50	10.50	MTL
H7	24.50	27.50	42.50	57.50	-	AD
H7	24.50	27.50	42.50	25.00	7.00	BTL
H7	24.50	27.50	42.50	23.00	9.00	VN
H7	24.50	27.50	42.50	22.00	11.50	BBL
H7	24.50	27.50	42.50	25.00	11.00	MRL

* Refer to “Capacitor Drawing”on page 7 to 11

MP-4

Table of Case Codes and Dimensions

Case code	Dimensions in mm*			P1	P2	Terminal Styles
	B	H	L	P ±0.5		
C2	43.00	50.00	54.00	48.50	-	FT,2P,3P,ADD
C2	43.00	50.00	54.00	26.50	11.50	TL,RL,STL,SL
C2	43.00	50.00	54.00	27.00	13.00	MTL
C2	43.00	50.00	54.00	68.50	-	AD
C2	43.00	50.00	54.00	37.00	19.00	BTL
C2	43.00	50.00	54.00	55.00	28.00	CL
C2	43.00	50.00	54.00	22.00	11.10	VT
C2	43.00	50.00	54.00	25.00	11.00	MRL
C2	43.00	50.00	54.00	22.00	11.50	BBL
C2	43.00	50.00	54.00	38.50	17.00	TP
E3	35.00	46.00	54.00	48.50	-	FT,2P,3P,ADD
E3	35.00	46.00	54.00	26.50	11.50	TL,RL,STL,SL
E3	35.00	46.00	54.00	27.00	13.00	MTL
E3	35.00	46.00	54.00	68.50	-	AD
E3	35.00	46.00	54.00	37.00	19.00	BTL
E3	35.00	46.00	54.00	55.00	28.00	CL
E3	35.00	46.00	54.00	22.00	11.10	VT
E3	35.00	46.00	54.00	25.00	11.00	MRL
E3	35.00	46.00	54.00	22.00	11.50	BBL
E3	35.00	46.00	54.00	38.50	17.00	TP

* Refer to “Capacitor Drawing”on page 7 to 11

Precaution

1. These capacitors are not suitable for ‘across the line’ applications
2. VAC (rated) : Frequency should be less than 1000Hz
3. VDC(rated) : 1.4 x Vrms + VDC should be less than rated VDC
4. MAX ESR = Typical ESR +30%

Catalogue No. AEPL MP - 4 -JULY- 2020 (Rev 01)

IGBT SNUBBER CAPACITORS - DIRECT MOUNTING

KPF

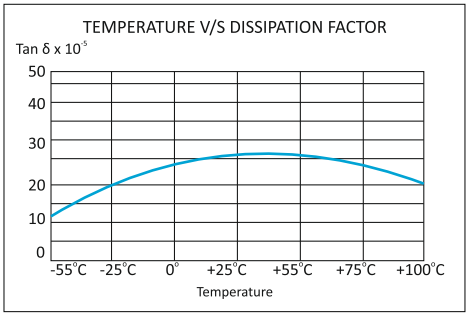

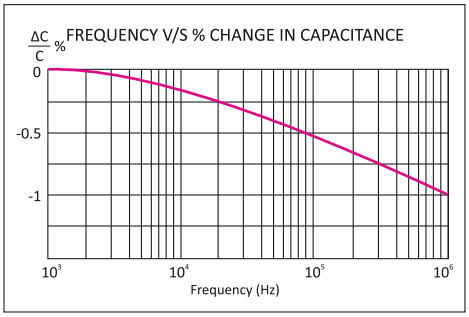

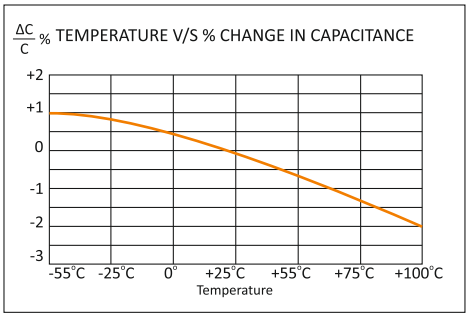

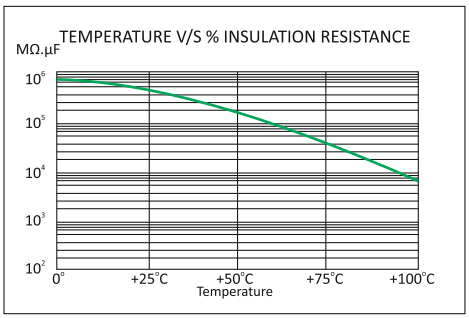

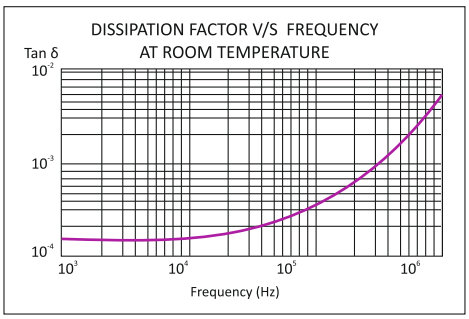

Highlights

- Self-healing property
- High DV / DT
- Low ESR
- Low loss polypropylene dielectric
- Reference standard-IEC 61071
- Flame retardant UL94 - V0, ROHS compliant

Construction

Extended foil electrodes with metallised polypropylene dielectric internal series connection

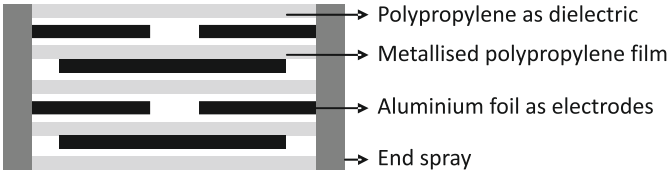

Applications

These capacitors are used in high voltage, high current and high pulse applications such as:

- IGBT protection circuits
- Snubber networks
- Energy conversion and control in power electronics
- Protection circuits in SMPS

KPF

Technical Specifications

Physical Characteristics

▪ Dielectric material	Polypropylene film.
▪ Electrode material	Aluminum foil and metallised polypropylene film
▪ Winding construction	Extended foil electrodes with metallised polypropylene dielectric internal series connection
▪ Enclosure	Preformed UL 94 V-0 plastic case with thermosetting resin-fill

Electrical Characteristics

▪ Capacitance range	0.1 MFD to 3.3 MFD
▪ Capacity tolerance	±5%(J), ±10%(K)
▪ Rated voltage VDC	1000, 1250, 1500, 2000
▪ Rated voltage VAC	480, 550, 630, 700
▪ Test voltage between terminals	1.6 x rated voltage VDC for 2 seconds
▪ Test voltage terminal to case	3KVAC at 50Hz for 60 seconds
▪ Dissipation factor (Tan d)	≤0.0005 at 1 KHz and 25°C
▪ Temperature range	-40°C to +85°C
▪ Insulation resistance at 25°C & at a test voltage of 500 VDC applied for 1 minute	C ≤ 0.33 MFD ≥100,000MΩ C > 0.33 MFD ≥30,000MΩ

Marking on Capacitors

Each capacitor will have the following information printed on it, sequentially:

- The Company's symbol followed by the words ALCON
- The capacitor grade viz KPF
- The capacitance value MFD
- The rated voltage VDC
- Capacity tolerance and manufacturing code
- Part number on non-standard capacitors

KPF

Standard Capacitor Values

Working Voltage 1000 VDC (480 VAC)

Rated Capacitance MFD	Case Code	DV/DT V/µ Sec	I Peak Amps	Irms Max at 100KHz & 70°C Amps	Typical ESR at100KHz mΩ	Ordering Code*
0.100	K2	1200	120.00	5.60	11.20	SI00U101000AF0K2_ _ _ _ K01
0.150	K2	1200	180.00	5.70	10.80	SI00U151000AF0K2_ _ _ _ K01
0.220	K3	1200	264.00	6.80	10.40	SI00U221000AF0K3_ _ _ _ K01
0.220	B1, C1	1200	264.00	18.20	4.20	SI00U221000AF_ _ _ _ _ _ _ K01
0.270	B1, C1	1000	270.00	18.70	4.00	SI00U271000AF_ _ _ _ _ _ _ K01
0.330	B1, C1	1000	330.00	19.70	3.70	SI00U331000AF_ _ _ _ _ _ _ K01
0.390	B1, C1	1000	390.00	20.60	3.70	SI00U391000AF_ _ _ _ _ _ _ K01
0.470	B1, C1	1000	470.00	21.10	3.50	SI00U471000AF_ _ _ _ _ _ _ K01
0.560	B1	900	504.00	21.30	3.50	SI00U561000AF0B1_ _ _ _ K01
0.680	B1	900	612.00	21.30	3.50	SI00U681000AF0B1_ _ _ _ K01
0.750	E1	900	675.00	25.60	3.20	SI00U751000AF0E1_ _ _ _ K01
0.820	E1	900	738.00	26.00	3.00	SI00U821000AF0E1_ _ _ _ K01
1.000	E1	900	900.00	26.00	3.00	SI000011000AF0E1_ _ _ _ K01
1.200	B3	900	1080.00	26.00	2.50	SI01U201000AF0B3_ _ _ _ K01
1.500	B3	900	1350.00	26.00	2.50	SI01U501000AF0B3_ _ _ _ K01
1.750	E2	800	1400.00	28.00	2.50	SI01U751000AF0E2_ _ _ _K01
2.000	E2	800	1600.00	28.20	2.50	SI000021000AF0E2_ _ _ _ K01
2.200	E2	700	1540.00	28.50	2.40	SI02U201000AF0E2_ _ _ _ K01
2.500	E3	600	1500.00	29.00	2.20	SI02U501000AF0E3_ _ _ _ K01
3.000	C2	600	1800.00	30.00	2.00	SI000031000AF0C2_ _ _ _ K01
3.300	C2	600	1980.00	30.00	2.00	SI03U301000AF0C2_ _ _ _ K01

Working Voltage 1250 VDC (550VAC)

Rated Capacitance MFD	Case Code	DV/DT V/µ Sec	I Peak Amps	Irms Max at 100KHz & 70°C Amps	Typical ESR at100KHz mΩ	Ordering Code*
0.100	K2	1400	140.00	5.60	11.20	SI00U101250AF0K2_ _ _ _ K01
0.150	K2	1400	210.00	5.70	10.80	SI00U151250AF0K2_ _ _ _ K01
0.220	K3	1400	308.00	6.80	10.40	SI00U221250AF0K3_ _ _ _ K01
0.220	B1, C1	1400	308.00	18.20	4.20	SI00U221250AF_ _ _ _ _ _ _ K01
0.270	B1, C1	1200	324.00	18.70	4.00	SI00U271250AF_ _ _ _ _ _ _ K01
0.330	B1, C1	1200	396.00	19.70	3.70	SI00U331250AF_ _ _ _ _ _ _ K01
0.390	B1, C1	1200	468.00	20.60	3.70	SI00U391250AF_ _ _ _ _ _ _ K01
0.470	B1	1200	564.00	21.10	3.50	SI00U471250AF0B1_ _ _ _ K01
0.560	E1	1100	616.00	21.30	3.50	SI00U561250AF0E1_ _ _ _ K01
0.680	E1	1100	748.00	21.30	3.50	SI00U681250AF0E1_ _ _ _ K01
0.750	E1	1100	825.00	25.60	3.20	SI00U751250AF0E1_ _ _ _ K01
0.820	B2	1100	902.00	26.00	3.00	SI00U821250AF0B2_ _ _ _ K01
1.000	B2	1100	1100.00	26.00	3.00	SI000011250AF0B2_ _ _ _ K01
1.200	E2	800	960.00	26.00	2.50	SI01U201250AF0E2_ _ _ _ K01
1.500	E2	800	1200.00	26.00	2.50	SI01U501250AF0E2_ _ _ _ K01
1.750	E3	800	1400.00	28.00	2.50	SI01U751250AF0E3_ _ _ _ K01
2.000	E3	800	1600.00	28.20	2.50	SI000021250AF0E3_ _ _ _ K01
2.200	C2	800	1760.00	28.50	2.40	SI02U201250AF0C2_ _ _ _ K01
2.500	C2	800	2000.00	29.00	2.20	SI02U501250AF0C2_ _ _ _ K01

Custom-designed capacitors are available on request
Refer to “Capacitor Drawing”on page 5 to 10

KPF

Standard Capacitor Values

Working Voltage 1500 VDC (630 VAC)

Rated Capacitance MFD	Case Code	DV/DT V/µ Sec	I Peak Amps	Irms Max at 100KHz & 70°C Amps	Typical ESR at100KHz mΩ	Ordering Code*
0.100	K2	1600	160.00	5.60	11.20	SI00U101500AF0K2_ _ _ _ K01
0.150	K2	1600	240.00	5.70	10.80	SI00U151500AF0K2_ _ _ _ K01
0.220	B1,C1	1600	352.00	18.20	4.20	SI00U221500AF_ _ _ _ _ _ _ K01
0.270	B1,C1	1400	378.00	18.70	4.00	SI00U271500AF_ _ _ _ _ _ _ K01
0.330	B1,C1	1400	462.00	19.70	3.70	SI00U331500AF_ _ _ _ _ _ _ K01
0.390	E1	1400	546.00	20.60	3.70	SI00U391500AF0E1_ _ _ _ K01
0.470	E1	1400	658.00	21.10	3.50	SI00U471500AF0E1_ _ _ _ K01
0.560	E2	1300	728.00	21.30	3.50	SI00U561500AF0E2_ _ _ _ K01
0.680	E2	1300	884.00	21.30	3.50	SI00U681500AF0E2_ _ _ _ K01
0.750	E2	1300	975.00	25.60	3.20	SI00U751500AF0E2_ _ _ _ K01
0.820	E2	1300	1066.00	26.00	3.00	SI00U821500AF0E2_ _ _ _ K01
1.000	E2	1300	1300.00	26.00	3.00	SI000011250AF0B2_ _ _ _ K01
1.200	E2	1300	1560.00	26.00	2.50	SI01U201500AF0E2_ _ _ _ K01
1.500	E3	1300	1950.00	26.00	2.50	SI01U501500AF0E3_ _ _ _ K01
1.750	E3	1000	1750.00	28.00	2.50	SI01U751500AF0E3_ _ _ _ K01
2.000	C2	1000	2000.00	28.20	2.50	SI000021500AF0C2_ _ _ _ K01

Working Voltage 2000 VDC (700VAC)

Rated Capacitance MFD	Case Code	DV/DT V/µ Sec	I Peak Amps	Irms Max at 100KHz & 70°C Amps	Typical ESR at100KHz mΩ	Ordering Code*
0.100	B1	1900	190.00	13.20	8.40	SI00U102000AF0B1_ _ _ _ K01
0.150	B1	1900	285.00	15.11	7.00	SI00U152000AF0B1_ _ _ _ K01
0.220	E1	1900	418.00	19.80	4.50	SI00U222000AF0E1_ _ _ _ K01
0.270	E1	1900	513.00	21.70	4.30	SI00U272000AF0E1_ _ _ _ K01
0.330	B2	1700	561.00	22.20	4.10	SI00U332000AF0B2_ _ _ _ K01
0.390	B3	1700	663.00	22.50	4.00	SI00U392000AF0B3_ _ _ _ K01
0.470	B3	1700	799.00	22.50	4.00	SI00U472000AF0B3_ _ _ _ K01
0.560	E2	1600	896.00	22.70	3.80	SI00U562000AF0E2_ _ _ _ K01
0.680	E3	1600	1088.00	22.80	3.70	SI00U682000AF0E3_ _ _ _ K01
0.750	E3	1500	1125.00	23.20	3.40	SI00U752000AF0E3_ _ _ _ K01
0.820	C2	1500	1230.00	23.20	3.30	SI00U822000AF0C2_ _ _ _ K01
1.000	C2	1500	1500.00	23.30	3.20	SI000012000AF0C2_ _ _ _ K01

Custom-designed capacitors are available on request
Refer to “Capacitor Drawing”on page 5 to 10

KPF

Capacitor Drawings and Terminal Styles

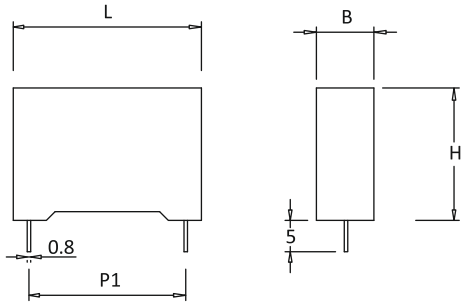

Terminal style : DL
Case code : K2,K3,K4

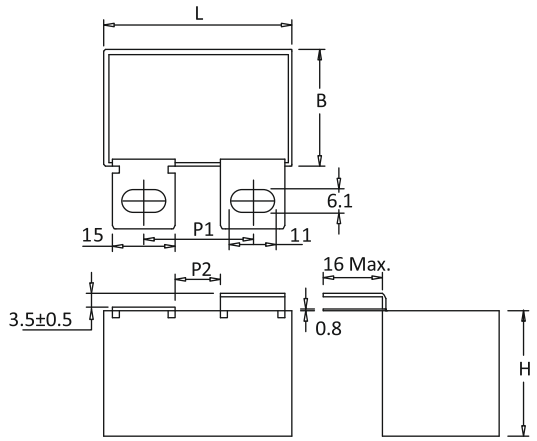

Terminal style : SL
Case code : B1,E1,B2,E2,B3,C2

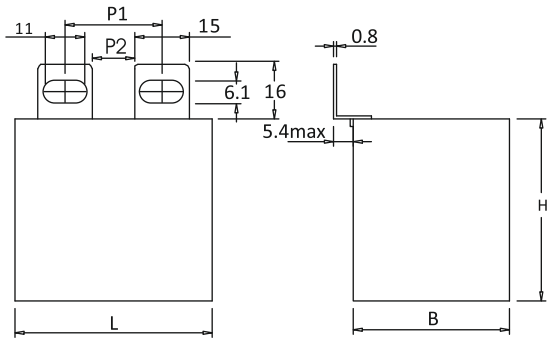

Terminal style : TL
Case code : B1,E1,B2,E2,B3,E3,C2

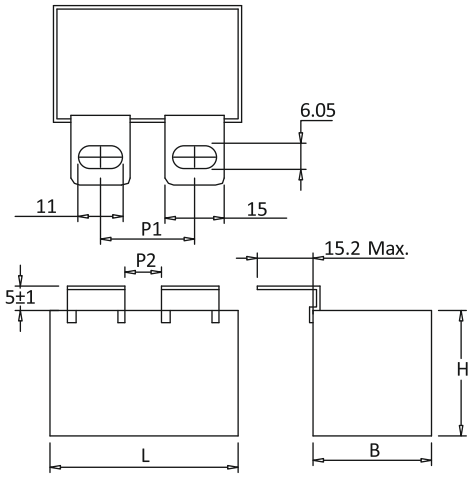

Terminal style : RL
Case code : B1,E1,B2,E2,B3,E3,C2

Dimensions in mm
For details see Case Code table on page 11 & 12

KPF

Capacitor Drawings and Terminal Styles

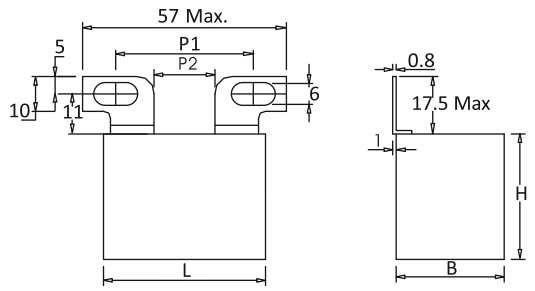

Terminal style : TP
Case code : B1,E1,B2,E2,B3

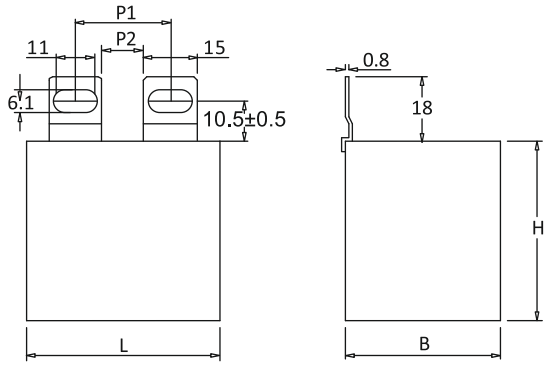

Terminal style : STL
Case code : B1,E1,B2,E2,B3,E3,C2

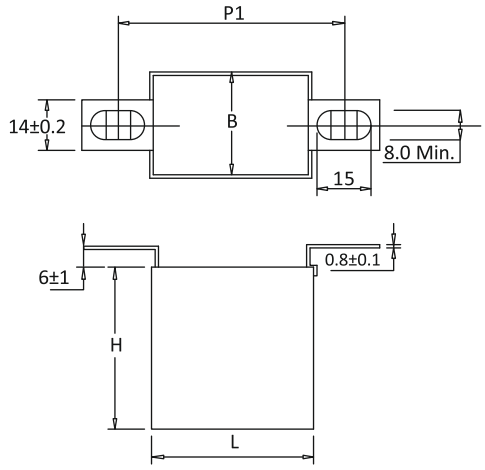

Terminal style : AD
Case code : E3,C2

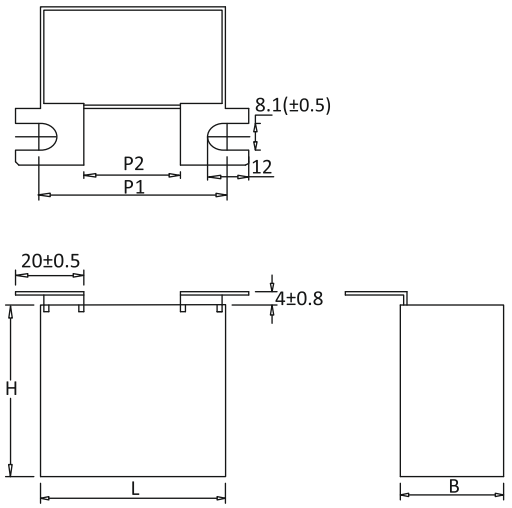

Terminal style : CL
Case code : E3,C2

Dimensions in mm
For details see Case Code table on page 11 & 12

KPF

Capacitor Drawings and Terminal Styles

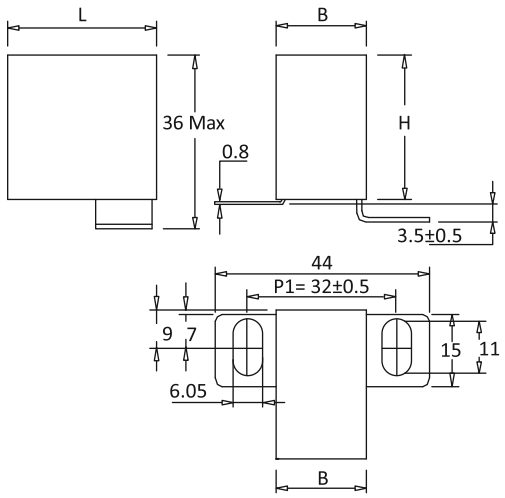

Terminal style :CT
Case code : C1

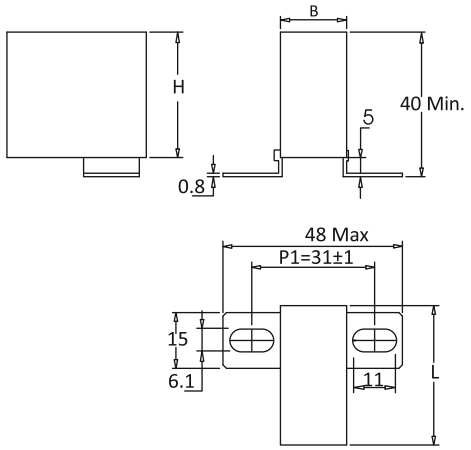

Terminal style : CR
Case code : C1

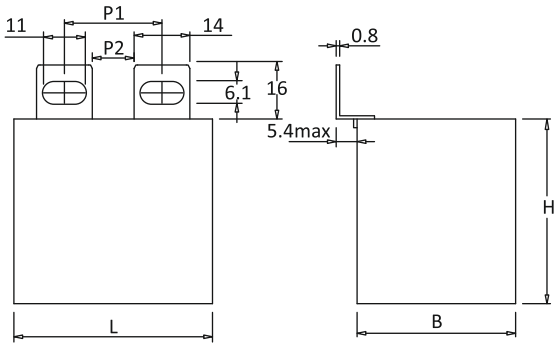

Terminal style : MTL
Case code : B1,E1,B2,E2,B3,E3,C2

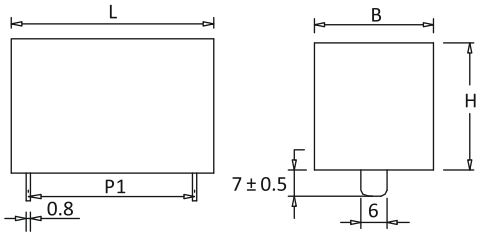

Terminal style : FT
Case code : B1,E1,B2,E2,B3

Dimensions in mm
For details see Case Code table on page 11 & 12

KPF

Capacitor Drawings and Terminal Styles

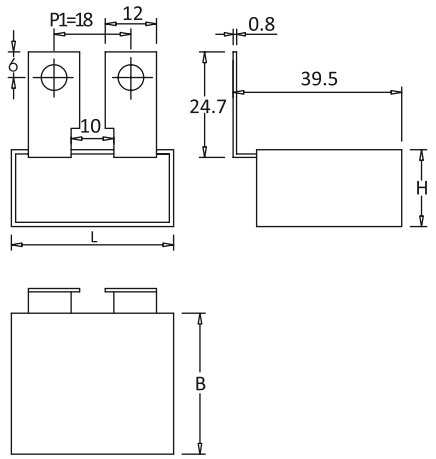

Terminal style :AB
Case code : C1

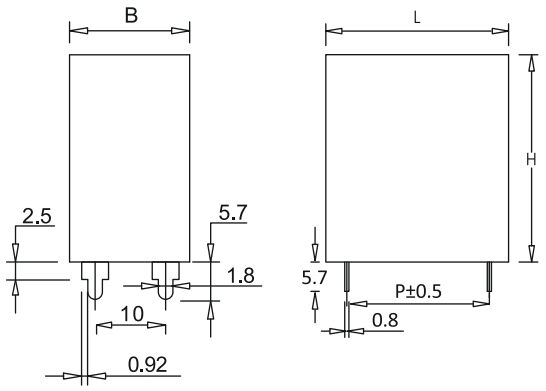

Terminal style : 2P
Case code : B1,E1,B2

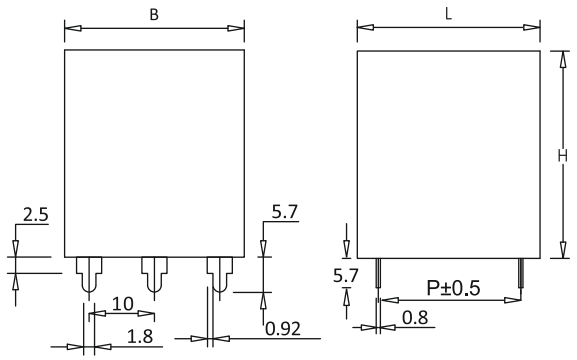

Terminal style : 3P
Case code : E2,B3,E3

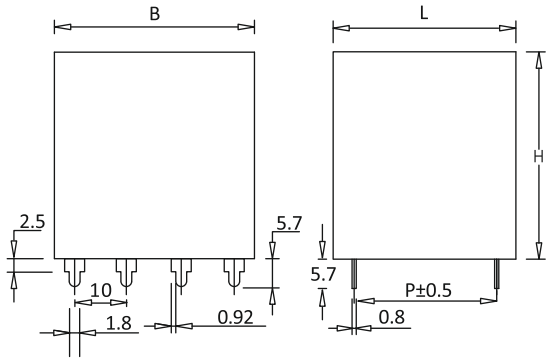

Terminal style : 4P
Case code : C2

Dimensions in mm
For details see Case Code table on page 11 & 12

KPF

Capacitor Drawings and Terminal Styles

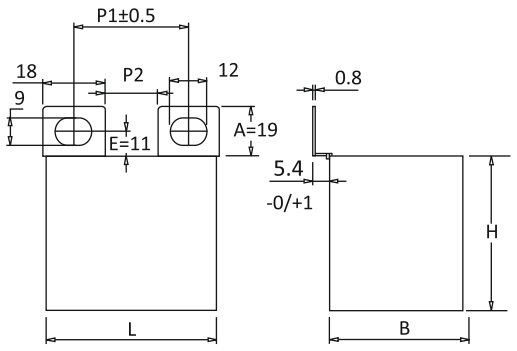

Terminal style : BTL
Case code : B2,E2,B3,E3,C2

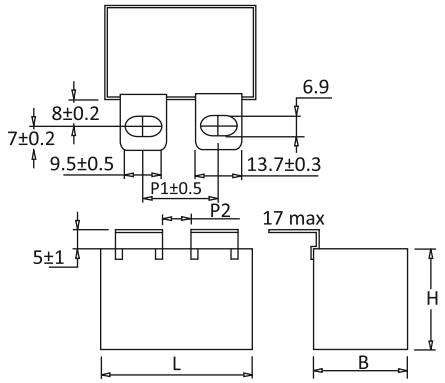

Terminal style : MRL
Case code : B1,E1,B2,B3,E2,E3,C2

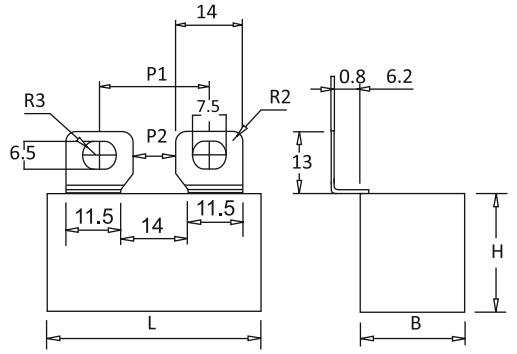

Terminal style : VN
Case code : B1,E1,B2,B3,E2,E3,C2

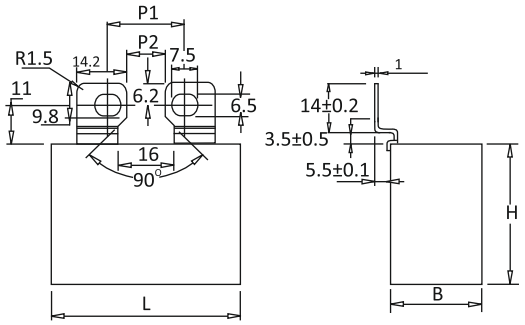

Terminal style : VT
Case code : B1,E1,B2,B3,E2,E3,C2

Dimensions in mm
For details see Case Code table on page 11 & 12

KPF

Capacitor Drawings and Terminal Styles

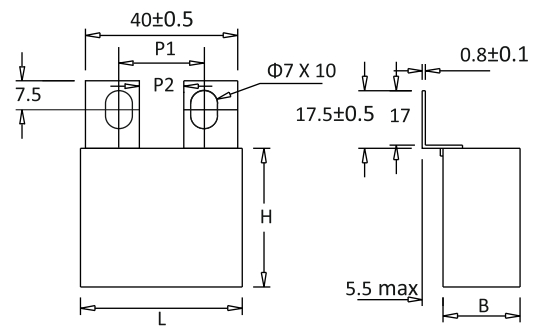

Terminal style : BBL
Case code : E3,E1,B2,E2,B3

Dimensions in mm
For details see Case Code table on page 11 & 12

KPF

Table of Case Codes and Dimensions

Case Code	Dimensions in mm*			P1	P2	Terminal Styles
	B±1	H±1	L±1	P±0.5		
K2	11.0	20.0	32.0	27.5	–	DL
K3	13.0	22.0	32.0	27.5	–	DL
K4	14.0	24.0	32.0	27.5	–	DL
B1	17.0	29.0	41.5	37.5	–	FT,2P
B1	17.0	29.0	41.5	23.5	8.5	TL,RL,STL,SL
B1	17.0	29.0	41.5	22.0	8.5	MRL
B1	17.0	29.0	41.5	38.5	17.0	TP
B1	17.0	29.0	41.5	24.5	10.5	MTL
B1	17.0	29.0	41.5	23.0	9.0	VN
E1	20.0	36.0	42.0	37.5	–	FT,2P
E1	20.0	36.0	42.0	23.5	8.5	TL,RL,STL,SL
E1	20.0	36.0	42.0	22.0	8.5	MRL
E1	20.0	36.0	42.0	38.5	17.0	TP
E1	20.0	36.0	42.0	24.5	10.5	MTL
E1	20.0	36.0	42.0	22.0	11.5	BBL
E1	20.0	36.0	42.0	22.0	11.1	VT
E1	20.0	36.0	42.0	23.0	9.0	VN
B2	24.0	38.0	45.0	37.5	–	FT,2P
B2	24.0	38.0	45.0	23.5	8.5	TL,RL,STL,SL
B2	24.0	38.0	45.0	22.2	8.5	MRL
B2	24.0	38.0	45.0	38.5	17.0	TP
B2	24.0	38.0	45.0	24.5	10.5	MTL
B2	24.0	38.0	45.0	23.0	9.0	VN
B2	24.0	38.0	45.0	22.0	11.1	VT
B2	24.0	38.0	45.0	25.0	7.0	BTL
B2	24.0	38.0	45.0	22.0	11.5	BBL
E2	35.0	42.0	45.0	37.5	–	FT,3P
E2	35.0	42.0	45.0	27.0	11.5	TL,RL,STL,SL
E2	35.0	42.0	45.0	25.0	11.5	MRL
E2	35.0	42.0	45.0	38.5	17.0	TP
E2	35.0	42.0	45.0	27.0	13.0	MTL
E2	35.0	42.0	45.0	25.0	7.0	BTL
E2	35.0	42.0	45.0	22.0	11.1	VT
E2	35.0	42.0	45.0	23.0	9.0	VN
E2	35.0	42.0	45.0	22.0	11.5	BBL
B3	30.0	45.0	45.0	37.5	–	FT,3P
B3	30.0	45.0	45.0	26.50	11.5	TL,RL,STL,SL,VT,VN
B3	30.0	45.0	45.0	25.0	11.5	MRL
B3	30.0	45.0	45.0	38.5	17.0	TP
B3	30.0	45.0	45.0	27.0	13.0	MTL
B3	30.0	45.0	45.0	25.0	7.0	BTL
B3	30.0	45.0	45.0	22.0	11.5	BBL
E3	35.0	46.0	54.0	48.5	–	3P
E3	35.0	46.0	54.0	26.50	11.5	TL,RL,STL,SL
E3	35.0	46.0	54.0	25.00	11.5	MRL
E3	35.0	46.0	54.0	27.0	13.0	MTL
E3	35.0	46.0	54.0	68.5	–	AD
E3	35.0	46.0	54.0	55.0	28.0	CL
E3	35.0	46.0	54.0	37.0	19.0	BTL
E3	35.0	46.0	54.0	22.0	11.1	VT
E3	35.0	46.0	54.0	23.0	9.0	VN
E3	35.0	46.0	54.0	22.0	11.5	BBL
C2	43.0	50.0	54.0	37.0	19.0	BTL
C2	43.0	50.0	54.0	48.5	–	4P

* Refer to “Capacitor Drawing”on page 5 to 10

KPF

Table of Case Codes and Dimensions

Case Code	Dimensions in mm*			P1	P2	Terminal Styles
	B±1	H±1	L±1	P+0.5		
C2	43.0	50.0	54.0	26.50	11.5	TL,RL,STL,SL,BTL
C2	43.0	50.0	54.0	25.0	11.5	MRL
C2	43.0	50.0	54.0	27.0	13.0	MTL
C2	43.0	50.0	54.0	68.5	–	AD
C2	43.0	50.0	54.0	55.0	28.0	CL
C2	43.0	50.0	54.0	22.0	11.1	VT
C2	43.0	50.0	54.0	23.0	9.0	VN
C1	18.0	33.0	38.0	32.0	–	CT
C1	18.0	33.0	38.0	18.0	–	AB
C1	18.0	33.0	38.0	31.0	–	CR

* Refer to “Capacitor Drawing”on page 5 to 10

Precaution

1. These capacitors are not suitable for ‘across the line’ applications
2. VAC(rated) : Frequency should be less than 1000Hz
3. VDC(rated) : 1.4 x Vrms + VDC should be less than rated VDC
4. MAX ESR = Typical ESR +30%

Catalogue No. AEPL KPF - JULY - 2019 (Rev 00)